CARBON^3, TUCO Yard, Marström Composites

OS Wire Rigging System
Marine Hardware Catalogue

- Traceability of manufacturing and sourced base materials. Lowest grade used is AISI 316/EN 1.4401
- In house engineering and product development, FEA supported analysis by experienced sailors
- Forks, toggles, eyes are designed for maximum sup port of pins. Fatigues from dynamic loads is enemy #1 in rigging
- All components manufactured in house in our danish manufacturing facility. We have modern machine park of 28 CNC machines at Your disposal
- All components are electropolished for removal of waste particles ensuring long life and minimum corrossion
- BSI can offer complete or complementary deliveries from own swaging capability from 12 to 26mm wire. Both sizes included
- BSI is supplying rigging components to leading mast manufacurers & riggers
- ISO 9001; Strict quality control.
  Supported by in house testing facilities
- Worldwide distribution

ISO 9001
BUREAU VERITAS
Certification

BSI who manufactures OS Wire Rigging is rigging the world's largest sailing vessels. BSI is a market leader within rigging systems of all types and sizes of sailing vessels from small volume production boats to super yachts. The ambitious Danish company is capable of rigging the biggest yachts in the world. BSI is a complete supplier, who can match any client -and any boat size.

Modern CNC technology

The latest CNC technology is the integrated backbone of manufacturing -on all levels. BSI masters a wide range of processes – CNC turning and milling, forging, welding, surface treatment – in all kinds of high-grade steel and titanium. Our skilled epmloyees work with complex tasks in combination with the latest CAD and FEA software. BSI has four ranges of marine brands: OS Wire, BSI Rod Rigging, Moonlight hatches & protlights, Easy Marine. In addition, BSI works as a sub supplier for numerous companies within pneumatics, heat exchangers, and delivers hydraulic blocks for the Danish wind turbine industry.

Danish Design and Quality

BSI delivers innovative high quality rigging solutions with the scandinavian touch in its design. Yachts worldwide have been fitted with the strongest and lightest solutions from BSI. The Danish factory supplies leading mast manufaturers.

OS Wire fittings

BSI produces top quality products with guaranteed value for money. The expansion of BSI products is based on a straightforward uncompromising attitude as to designing, engineering, manufacturing and distributing a complete range of state-of-the-art rigging hardware.

Product development and design enginering based on Finite-Element-Analysis, fatigue tests, carefull choice of base materials, full tracaeability, and strict quality control are all elements to ensure the standards that make OS Wire fittings the ulitmate choice in wire fittings.

The success of OS Wire fittings is maintained by a worldwide distributing newtwork – providing second-to-none aftersales service.

Index

Turnbuckles

Closed Stainless Steel Turnbuckle, Metric thread

w/Fork, Fork (111-)	5
w/Fork, Wireterminal (112-)	6
w/Toggle, Fork (141-)	7
w/Toggle, Wireterminal (142-)	8
w/Fork, Fork (121-)	9
w/Fork, Wireterminal (122-)	10
w/Toggle, Fork (151-)	11
w/Toggle, Wireterminal (152-)	12

Open Chromed Bronze body Turnbuckle

w/Fork, Fork (171-)	13
w/Fork, Wireterminal (172-)	14
w/Toggle, Fork (181-)	15
w/Toggle, Wireterminal (182-)	16 - 17
w/Eye, Wireterminal (173-)	18
w/Ball, Wireterminal (177-)	19

Closed Stainless Steel Bronze inserted Turnbuckle

w/Toggle, Fork (191-)	20
w/Toggle, Wireterminal (192-)	21 - 22
w/Eye, Wireterminal (193-)	23
w/Fork, Wireterminal (194-)	24
w/Ball, Wireterminal (196-)	25

Swage Fittings

Ball Terminal (WB- WDB-)	27
Eye Terminal (24- 44- WE- WDE-)	28 - 29
Fork Terminal (25- WF- WDF-)	30 - 31
Toggle Terminal (35- WDDT-)	32
T-Terminal (26-)	33
Hook Terminal (280-)	34
Rope Terminal (290-)	34
Lifeline Terminal (300-)	35
Threaded Swage Terminal, Metric thread (21- 31- WS-)	36 - 37
Threaded Swage Terminal, UNF thread (23- 33- 43- WS- WDS-)	38 - 40

Threaded Fittings

Threaded Eye, Metric thread (11-)	42
Threaded Fork, Metric thread (11-)	43 - 44
Threaded Toggle Terminal, Metric thread (14-)	45
Closed Stainless Steel Body, Metric thread (11-)	46
Closed Stainless Steel Body, UNF thread (12-)	47
Open Chromed Bronze Body, UNF thread (18-)	48
Closed Stainless Steel Bronze inserted Body, UNF thread (19-)	49
Threaded Eye, UNF thread (13-)	50
Threaded Fork, UNF thread (13-)	51
Threaded Toggle Terminal, UNF thread (16-)	52
Threaded Ball Terminal, UNF thread (27- WB-)	53 - 54
Threaded T-terminal UNF thread (2612-)	55

Accessories

Backing Plate for T-terminals (70-)	57
Toggle (81-)	58
Stemball Cups (72- WBC-)	59
Stemball Eye (2427- WEB-)	60
T-Bar Eye (2426-)	60

Technical Data

Swaging data for Wire	61

All technical specifications, design details, availability are provided “as is” and subject to change without prior notice.

Closed Stainless Steel Turnbuckle, Metric thread w/Fork, Fork (111-)

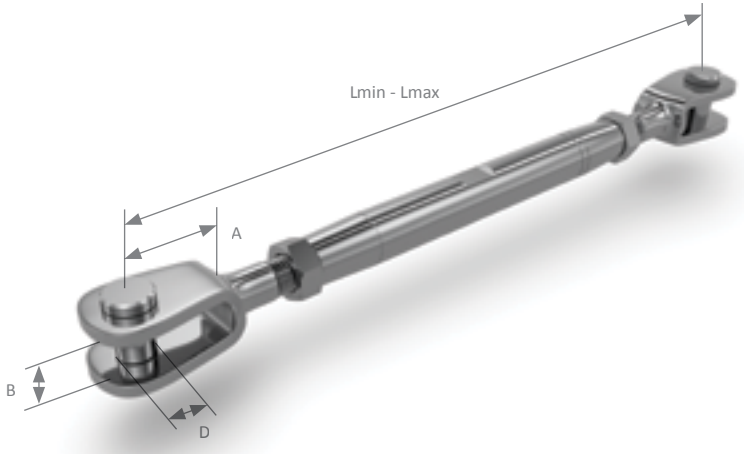

Article No.	Wire Ø			Thread metric	D mm	A mm	B mm	Lmin.-Lmax. mm	Weight [kg]	Break load [kg]
	mm	inch	Dye							
11100255	2.5	3/32”	-	M5	5.0	11.5	7.0	132 - 197	0.052	825
11150306	3	1/8”	3	M6	5.0	11.5	7.0	142 - 214	0.079	1300
11100306	3	1/8”	3	M6	6.3	13.0	7.0	145 - 217	0.089	1300
11160408	4	5/32”	-	M8	6.3	13.0	7.0	163 - 239	0.133	2200
11100408	4	5/32”	-	M8	8.0	17.0	8.0	173 - 249	0.168	2350
11180510	5	3/16”	-	M10	8.0	17.0	8.0	189 - 274	0.246	3550
11100510	5	3/16”	-	M10	9.5	19.0	10.0	193 - 278	0.284	3550
11100612	6	-	6	M12	12.7	25.0	14.5	250 - 359	0.561	5250
11100714	7	9/32”	7	M14	12.7	25.0	14.5	271 - 389	0.633	6000
11130816	8	5/16”	8	M16	12.7	32.5	17.0	312 - 444	0.943	8300
11100816	8	5/16”	8	M16	16.0	35.0	17.0	316 - 448	1.047	8300
11161020	10	-	-	M20	16.0	39.5	20.0	375 - 539	1.842	12800
11101020	12	-	-	M20	19.0	45.0	20.0	374 - 529	2.002	12800

Closed Stainless Steel Turnbuckle, Metric thread w/Fork, Wireterminal (112-)

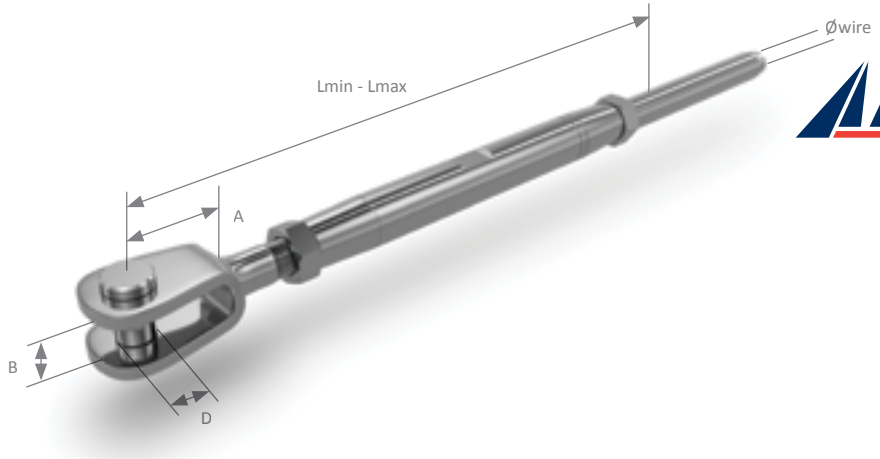

Article No.	Wire Ø			Thread metric	D mm	A mm	B mm	Lmin.-Lmax. mm	Weight [kg]	Break load [kg]
	mm	inch	Dye							
11200255	2.5	3/32”	-	M5	5.0	11.5	7.0	152 - 216	0.048	825
11250306	3	1/8”	3	M6	5.0	11.5	7.0	169 - 241	0.074	1200
11200306	3	1/8”	3	M6	6.3	13.0	7.0	171 - 243	0.079	1200
11250406	4	5/32”	-	M6	5.0	11.5	7.5	180 - 252	0.076	1300
11200406	4	5/32”	-	M6	6.3	13.0	7.0	178 - 250	0.083	1300
11200408	4	5/32”	-	M8	8.0	17.0	8.0	199 - 275	0.145	1550
11200508	5	3/16”	-	M8	8.0	17.0	8.0	207 - 283	0.154	2350
11280510	5	3/16”	-	M10	8.0	17.0	8.0	223 - 308	0.245	2350
11200510	5	3/16”	-	M10	9.5	19.0	10.5	225 - 310	0.250	2350
11200610	6	-	-	M10	9.5	19.0	10.5	243 - 328	0.291	3750
11200612	6	-	6	M12	12.7	25.0	14.5	288 - 397	0.505	5100
11200714	7	9/32”	7	M14	12.7	25.0	14.5	317 - 435	0.586	6000
11200814	8	5/16”	-	M14	12.7	25.0	14.5	337 - 455	0.634	6000
11230816	8	5/16”	8	M16	12.7	32.5	17.0	368 - 500	0.868	8300
11200816	8	5/16”	8	M16	16.0	35.0	17.0	370 - 502	0.944	7575
11261016	10	-	-	M16	16.0	35.0	17.0	391 - 523	1.105	8300
11261020	10	-	-	M20	16.0	39.5	20.0	434 - 589	1.545	9430
11201020	10	-	-	M20	19.0	45.0	20.0	439 - 594	1.688	9430
11201220	12	-	-	M20	19.0	45.0	20.0	464 - 619	1.774	11000
11201220HD	12	-	-	M20	19.0	45.0	20.0	449 - 604	1.755	12800
11201424	14	9/16”	-	M24	25.0	66.0	26.0	600 - 800	3.950	16550

Closed Stainless Steel Turnbuckle, Metric thread w/Toggle, Fork (141-)

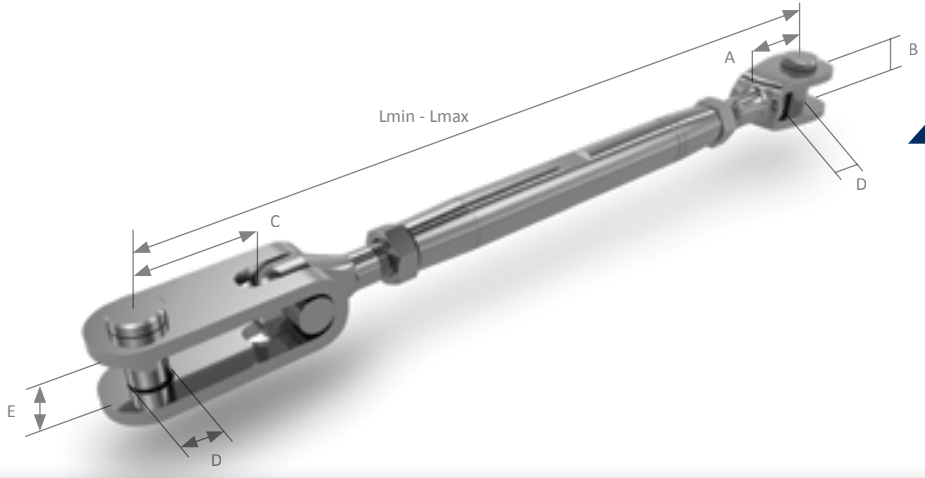

Article No.	Wire Ø			Thread metric	D mm	A mm	B mm	C mm	E mm	Lmin.-Lmax. mm	Weight [kg]	Break load [kg]
	mm	inch	Dye									
14100306*	3	1/8”	3	M6	6.3	13.0	7.0	14.0	8.0	150 - 222	0.099	1200
14100408	4	5/32”	-	M8	8.0	17.0	8.0	26.0	10.5	197 - 273	0.193	2200
14100510	5	3/16”	-	M10	9.5	19.0	10.0	29.0	12.0	226 - 311	0.362	3550
14100612	6	-	6	M12	12.7	25.0	14.5	35.5	15.5	285 - 394	0.671	5250
14100714	7	9/32”	7	M14	12.7	25.0	14.5	34.0	15.5	306 - 424	0.775	6000
14130816	8	5/16”	8	M16	12.7	32.5	17.0	33.0	15.5	337 - 469	1.009	7500
14100816	8	5/16”	8	M16	16.0	35.0	17.0	35.0	18.0	346 - 478	1.312	8300
14161020	10	-	-	M20	16.0	39.5	20.0	32.0	18.0	394 - 549	2003	12800
14101020	12	-	-	M20	19.0	45.0	20.0	36.5	22.0	408 - 563	2.146	12800

Closed Stainless Steel Turnbuckle, Metric thread w/Toggle, Wireterminal (142-)

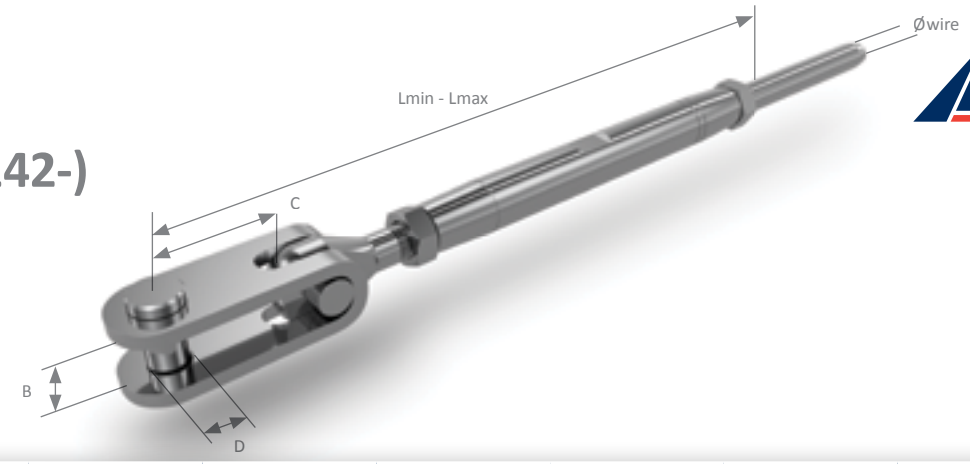

Article No.	Wire Ø			Thread metric	D mm	C mm	B mm	Lmin.-Lmax. mm	Weight [kg]	Break load [kg]
	mm	inch	Dye							
14200306*	3	1/8”	3	M6	6.3	14.0	8.0	175 - 247	0.090	1200
14200408	4	5/32”	-	M8	8.0	26.0	10.5	223 - 299	0.169	1550
14200508	5	3/16”	-	M8	8.0	26.0	10.5	231 - 307	0.178	2350
14200510	5	3/16”	-	M10	9.5	29.0	12.0	258 - 343	0.327	2350
14200612	6	-	6	M12	12.7	35.5	15.5	320 - 429	0.609	5100
14200714	7	9/32”	7	M14	12.7	34.0	15.5	352 - 470	0.728	6000
14230816	8	5/16”	8	M16	12.7	33.0	15.5	381 - 520	1.029	7500
14200816	8	5/16”	8	M16	16.0	34.5	18.0	388 - 520	1.192	8300
14261020	10	-	-	M20	16.0	32.0	18.0	449 - 604	1.784	9430
14201020	10	-	-	M20	19.0	36.5	22.0	458 - 613	1.971	9430
14201220	12	-	-	M20	19.0	36.5	22.0	498 - 653	2.057	10600
14201220HD	12	-	-	M20	19.0	36.5	22.0	483 - 638	2.038	12550

Closed Stainless Steel Turnbuckle, UNF thread w/Fork, Fork (121-)

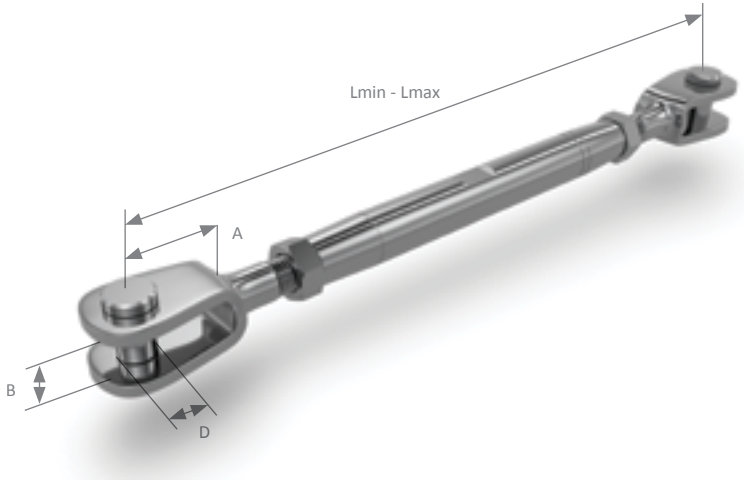

Article No.	Ø Wire mm	Thread Inch	Ø Pin Dye	W UNF	D mm	A mm	B mm	Lmin - Lmax mm	Weight [kg]	Break Load [kg]
12150306	3	1/8”	3	1/4”	5.0	11.5	7.5	142 - 204	0.087	1550
12100306	3	1/8”	3	1/4”	6.3	13.0	7.0	145 - 206	0.090	1550
12100408	4	5/32”	-	5/16”	8.0	17.0	8.0	173 - 239	0.168	2450
12100510	5	3/16”	-	3/8”	9.5	19.0	10.0	193 - 267	0.261	3500
12100611	6	-	6	7/16”	11.0	24.0	12.0	229 - 314	0.439	4750
12100712	7	9/32”	7	1/2”	12.7	25.0	14.5	250 - 341	0.550	6000
12130816	8	5/16”	8	5/8”	12.7	32.5	17.0	311 - 427	0.960	8300
12100816	8	5/16”	8	5/8”	16.0	35.0	17.0	316 - 432	1.038	8300
12161020	10	-	-	3/4”	16.0	39.5	20.0	363 - 505	1.696	12800
12101020	10	-	-	3/4”	19.0	45.0	20.0	374 - 516	1.982	12800

Closed Stainless Steel Turnbuckle, UNF thread w/Fork, Wireterminal (122-)

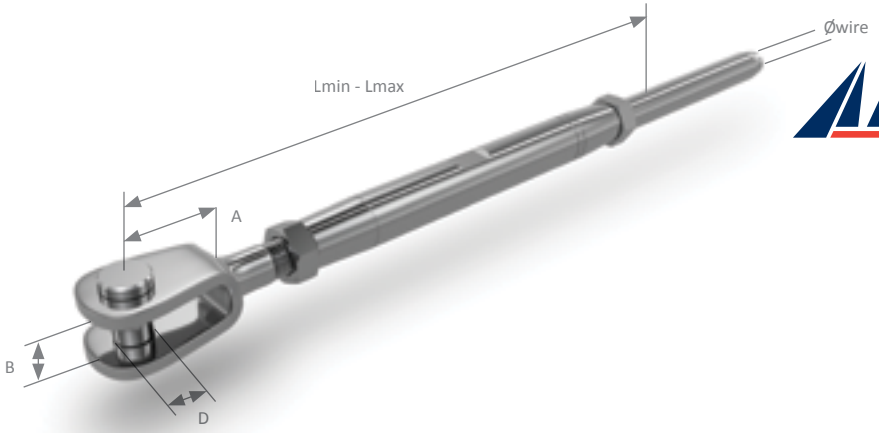

Article No.	Ø Wire			Thread UNF	D mm	B mm	A mm	Lmin - Lmax mm	Weight [kg]	Break Load [kg]
	mm	Inch	Dye							
12250306	3	1/8”	3	1/4”	5.0	7.0	11.5	169 - 230	0.08	1200
12200306	3	1/8”	3	1/4”	6.3	7.5	13	172 - 233	0.08	1550
12250406	4	5/32”	-	1/4”	5.0	7.0	11.5	176 - 237	0.08	1200
12200406	4	5/32”	-	1/4”	6.3	7.5	13	178 - 239	0.08	1550
12200408	4	5/32”	-	5/16”	8.0	8.0	17	199 - 265	0.14	1550
12200508	5	3/16”	-	5/16”	8.0	8.0	17	207 - 273	0.15	2350
12200510	5	3/16”	-	3/8”	9.5	10.5	19	225 - 299	0.32	2350
12200610	6	-	-	3/8”	9.5	10.0	19	243 - 317	0.27	3500
12200611	6	-	6	7/16”	11.0	12.0	24	269 - 353	0.40	4750
12200612	6	-	6	1/2”	12.7	14.5	25	225 - 320	0.46	5100
12200711	7	9/32”	-	7/16”	11.0	12.0	24	278 - 362	0.43	4750
12200712	7	9/32”	7	1/2”	12.7	14.5	25	296 - 387	0.52	6000
12200812	8	5/16”	-	1/2”	12.7	13.5	25	316 - 407	0.56	6000
12230816	8	5/16”	8	5/8”	12.7	17.0	32.5	368 - 484	0.84	8300
12200816	8	5/16”	8	5/8”	16.0	17.0	35	370 - 486	0.95	8300
12261020	10	-	-	3/4”	16.0	20.0	39.5	434 - 576	1.48	9430
12201020	10	-	-	3/4”	19.0	20.0	48	439 - 581	1.49	9430
12201220	12	-	-	3/4”	19.0	20.0	48	464 - 606	1.63	11000
12201220HD	12	-	-	3/4”	19.0	20.0	48	449 - 591	1.61	12800

Closed Stainless Steel Turnbuckle, UNF thread w/Toggle, Fork (151-)

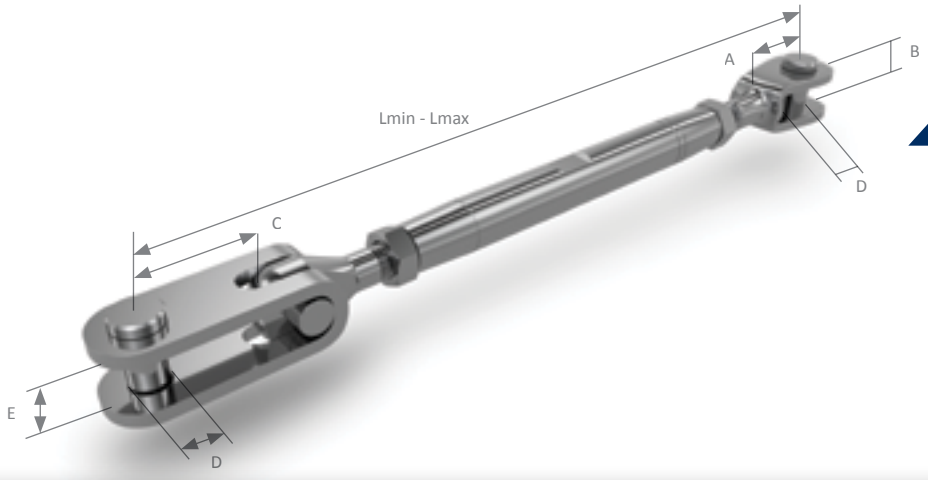

Article No.	Wire Ø			Thread UNF	D mm	A mm	B mm	C mm	E mm	Lmin.-Lmax. mm	Weight [kg]	Break load [kg]
	mm	inch	Dye									
15100306	3	1/8”	3	1/4”	6.3	13.0	7.0	14.0	8.0	150 - 211	0.102	1200
15100408	4	5/32”	-	5/16”	8.0	17.0	8.0	26.0	10.5	197 - 263	0.193	2450
15100510	5	3/16”	-	3/8”	9.5	19.0	10.0	29.0	12.0	226 - 300	0.340	3500
15100611	6	-	6	7/16”	11.0	24.0	12.0	31.5	14.0	257 - 342	0.527	4750
15100712	7	9/32”	7	1/2”	12.7	25.0	14.5	35.5	15.5	285 - 376	0.687	5900
15130816	8	5/16”	8	5/8”	12.7	32.5	17.0	33.5	15.5	337 - 453	1.010	7500
15100816	8	5/16”	8	5/8”	16.0	35.0	17.0	34.5	18.0	346 - 462	1.259	8300
15161020	10	-	-	3/4”	16.0	39.5	20.0	32.5	18.0	394 - 536	2.037	12800
15101020	12	-	-	3/4”	19.0	45.0	20.0	36.5	22.0	408 - 550	2.180	12800
15101422	14	9/16”	-	7/8”	22.0	46.0	24.0	40.0	24.0	521 - 736	4.231	18300
15101625	16	5/8”	-	1”	25.4	66.0	26.0	43.0	27.5	583 - 825	7.091	23000
15102829	19	3/4”	-	1 1/8”	28.5	75.0	30.0	55.0	30.0	675 - 915	-	29650

Closed Stainless Steel Turnbuckle, UNF thread w/Toggle, Wireterminal (152-)

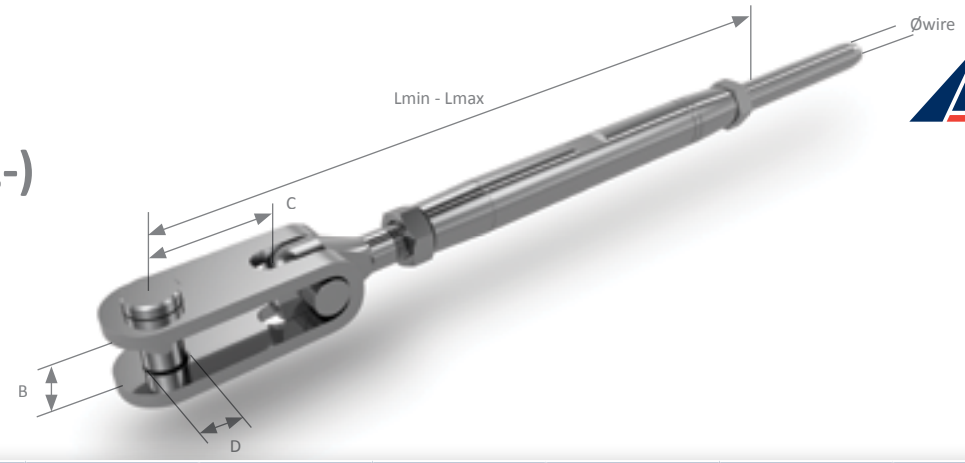

Article No.	Ø Wire			Thread UNF	D mm	B mm	C mm	Lmin - Lmax mm	Weight [kg]	Break Load [kg]
	mm	Inch	Dye							
15200306*	3	1/8”	3	1/4”	6.3	8.0	14.0	175 - 236	0.091	1200
15200408	4	5/32”	-	5/16”	8.0	10.5	26.0	223 - 289	0.167	1550
15200508	5	3/16”	-	5/16”	8.0	10.5	26.0	231 - 297	0.176	2400
15200510	5	3/16”	-	3/8”	9.5	12.0	29.0	258 - 333	0.303	2400
15200611	6	-	6	7/16”	11.0	14.0	31.5	294 - 379	0.496	4350
15200712	7	9/32”	7	1/2”	12.7	15.5	35.5	331 - 422	0.647	6000
15200812	8	5/16”	-	1/2”	12.7	15.5	35.5	338 - 429	0.694	6000
15230816	8	5/16”	8	5/8”	12.7	15.5	33.0	381 - 497	1.050	7500
15200816	8	5/16”	8	5/8”	16.0	18.0	34.5	388 - 515	1.192	7550
15261020	10	-	-	3/4”	16.0	18.0	32.0	449 - 591	1.778	8700
15201020	10	-	-	3/4”	19.0	22.0	36.5	458 - 600	1.907	8700
15201220	12	-	-	3/4”	19.0	22.0	36.5	475 - 617	1.955	10600
15201220HD	12	-	-	3/4”	19.0	22.0	36.5	475 - 617	2.205	12550
15201320	12.7	1/2”	-	3/4”	19.0	22.0	36.5	483 - 625	2.076	12800
15201422	14	9/16”	-	7/8”	22.0	24.0	46.0	599 - 814	4.187	17000
15201625	16	5/8”	-	1”	25.4	27.5	43.0	649 - 891	7.217	22250

Open Chromed Bronzebody Turnbuckle w/Fork, Fork (171-)

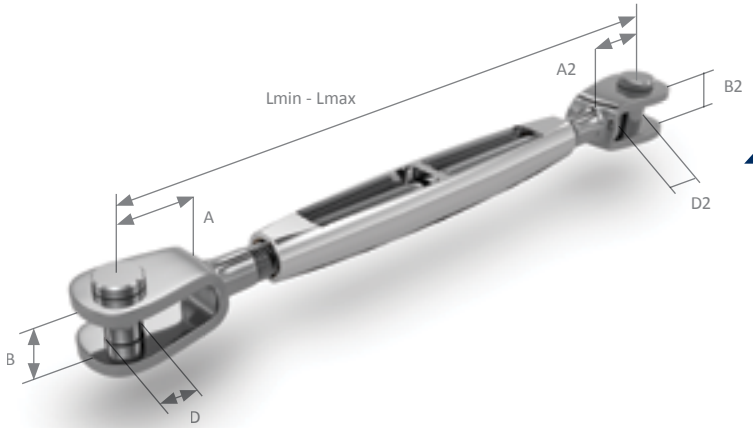

Article No	D Inch / mm	B mm	A mm	D2 Inch / mm	B2 mm	A2 mm	Lmin-Lmax mm	Break Load kg	Weight kg
17100306	1/4” / Ø6.3	8.0	14.0	1/4” / Ø6.3	7.0	13.5	147 - 210	1550	0.116
17100408	5/16” / Ø7.9	10.5	26.0	5/16” / Ø7.9	8.2	17.0	176 - 260	2450	0.200
17100510	3/8” / Ø9.5	12.0	29.0	3/8” / Ø9.5	10.0	20.0	197 - 292	3650	0.174
17100611	7/16” / Ø11.1	14.0	31.5	7/16” / Ø11.1	12.0	23.5	234 - 342	4750	0.435
17100712	1/2” / Ø12.7	15.5	35.5	1/2” / Ø12.7	14.4	26.0	255 - 374	6450	0.624
17130816	1/2” / Ø12.7	15.5	33.5	1/2” / Ø12.7	17.0	32.0	318 - 469	9300	1.138
17100816	5/8” / Ø15.9	17.5	39.3	5/8” / Ø15.9	17.0	35.0	322 - 473	9300	1.216
17161020	5/8” / Ø15.9	17.5	32.5	5/8” / Ø15.9	20.0	40.0	370 - 551	13250	1.918
17101020	3/4” / Ø19.0	21.5	53.5	3/4” / Ø19.0	20.0	43.5	380 - 561	13250	2.204
17101422	7/8” / Ø22.2	24.0	46.0	7/8” / Ø22.2	24.0	54.0	478 - 690	18300	3.662
17101625	1” / Ø25.4	28.0	43.0	1” / Ø25.4	26.0	66.0	531 - 776	23000	5.398

Open Chromed Bronzebody Turnbuckle w/Fork, Wireterminal (172-)

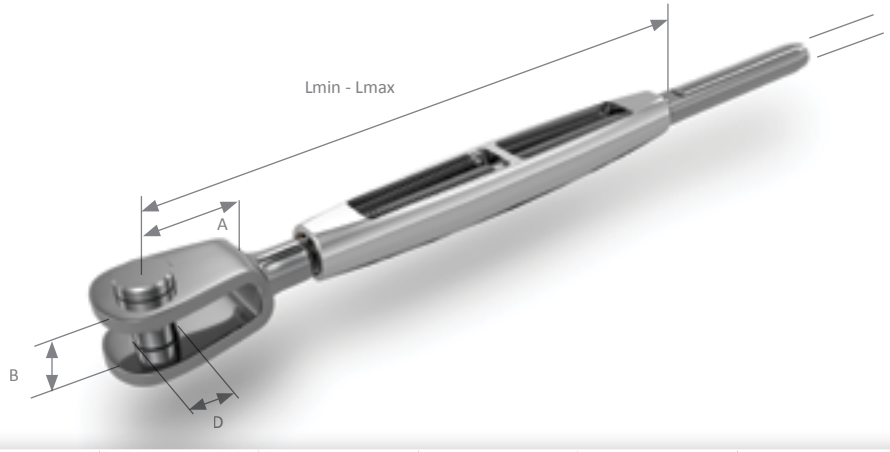

Article No.	Ø Wire			Thread UNF	D mm	B mm	A mm	Lmin -Lmax mm	DBS before swaging mm	Weight [Kg]	Break Load [Kg]
	mm	Inch	Dye								
17200306	3	1/8”	3	1/4”	6.3	7.5	13.5	134.5 - 208.5	6.22 - 6.35	0.106	1200
17200408	4	5/32”	-	5/16”	8.0	9.5	17.0	157.0 - 241.0	7.42 - 7.50	0.174	1550
17200510	5	3/16”	-	3/8”	9.5	11.0	20.0	176.5 - 272.5	9.00 - 9.11	0.329	2350
17200610	6	-	-	3/8”	9.5	11.0	20.0	179.0 - 275.0	12.42 - 12.55	0.365	3650
17200611	6	-	6	7/16”	11.0	12.5	23.5	207.0 - 315.0	12.42 - 12.55	0.396	4750
17200712	7	9/32”	7	1/2”	12.7	14.0	26.0	230.5 - 349.5	14.18 - 14.30	0.592	6400
17230816	8	5/16”	8	5/8”	12.7	15.0	32.0	284.0 - 435.0	16.01 - 16.13	1.002	8580
17200816	8	5/16”	8	5/8”	16.0	17.5	35.0	286.0 - 437.0	16.01 - 16.13	1.116	8580
17261020	10	-	-	3/4”	16.0	19.0	40.0	330.0 - 511.0	17.73 - 17.86	1.686	9430
17201020	10	-	-	3/4”	19.0	21.5	49.0	335.0 - 516.0	17.73 - 17.86	1.689	9430
17201220	12	-	-	3/4”	19.0	21.5	49.0	351.0 - 515.0	19.95 - 20.00	1.925	11000
17201220HD	12	-	-	3/4”	19.0	21.5	49.0	328.0 - 509.0	21.31 - 21.44	2.026	13250
17201422	14	9/16”	-	7/8”	22.0	26.0	54.0	401.0 - 613.0	24.88 - 25.00	3.266	16550

Open Chromed Bronzebody Turnbuckle w/Toggle, Fork (181-)

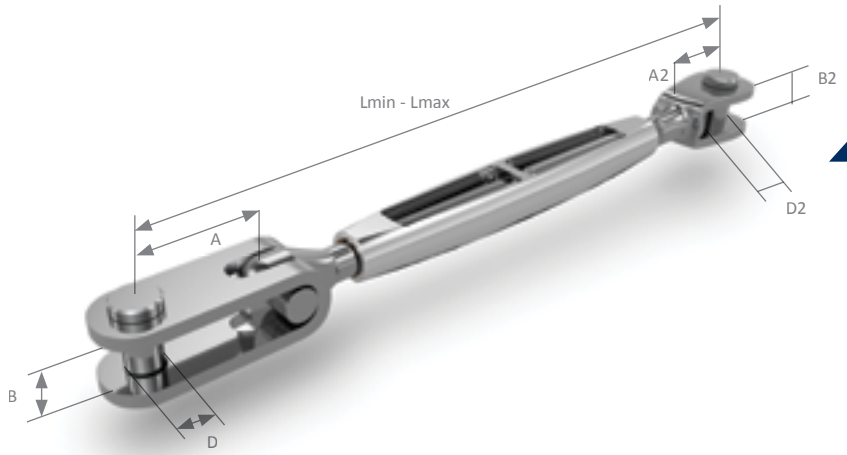

Article No	D Inch / mm	B mm	A mm	D2 Inch / mm	B2 mm	A2 mm	Lmin-Lmax mm	Break Load kg	Weight kg
18100306	1/4" / Ø6.3	8.0	14.0	1/4" / Ø6.3	7.0	13.5	152 - 226	1200	0.128
18100408	5/16" / Ø7.9	10.5	26.0	5/16" / Ø7.9	8.2	17.0	201 - 285	2450	0.255
18100510	3/8" / Ø9.5	12.0	29.0	3/8" / Ø9.5	10.0	20.0	230 - 325	3550	0.353
18100611	7/16" / Ø11.1	14.0	31.5	7/16" / Ø11.1	12.0	23.5	262 - 370	4650	0.523
18100712	1/2" / Ø12.7	15.5	35.5	1/2" / Ø12.7	14.4	26.0	289 - 408	5900	0.761
18130816	1/2" / Ø12.7	15.5	33.5	1/2" / Ø12.7	17.0	32.0	343 - 494	7500	1.19
18100816	5/8" / Ø15.9	17.5	39.3	5/8" / Ø15.9	17.0	35.0	362 - 497	9000	1.54
18161020	5/8" / Ø15.9	17.5	32.5	5/8" / Ø15.9	20.0	40.0	400 - 581	13250	2.26
18101020	3/4" / Ø19.0	21.5	53.5	3/4" / Ø19.0	20.0	43.5	442 - 612	13250	2.61
18101422	7/8" / Ø22.2	24.0	46.0	7/8" / Ø22.2	24.0	54.0	533 - 735	17850	3.95

Open Chromed Bronzebody Turnbuckle w/Toggle, Wireterminal (182-)

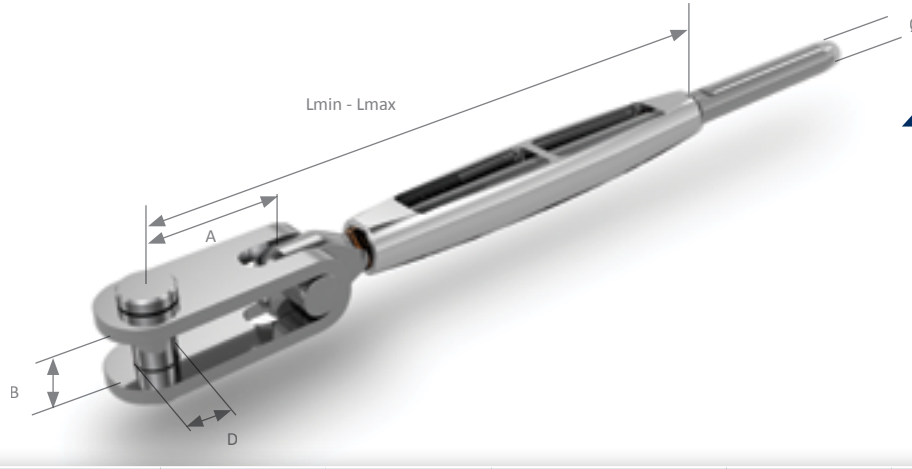

Article No.	Ø Wire			Thread UNF	D mm	B mm	A mm	Lmin - Lmax mm	Weight [kg]	Break Load [kg]
	mm	Inch	Dye							
18200306	3	1/8”	3	1/4”	6.3	8.0	14.0	139.5 - 213.5	0.117	1200
18200408	4	5/32”	-	5/16”	8.0	10.5	28.5	182.0 - 266.2	0.199	1550
18200508	5	3/16”	-	5/16”	8.0	10.5	28.5	183.5 - 268.5	0.241	2350
18200510	5	3/16”	-	3/8”	9.5	12.0	33.0	210.5 - 306.5	0.316	2350
18273210	5,5	7/32”	-	3/8”	9.5	12.0	33.0	215.0 - 302.0	0.385	3540
18201410	6,3	1/4”	-	3/8”	9.5	12.0	33.0	215.7 - 301.7	0.395	3540
18201411	6,3	1/4”	-	7/16”	11.0	14.0	35.0	237.7 - 335.7	0.425	4650
18201412	6,3	1/4”	1/4”	1/2”	12.7	15.5	39.0	265.7 - 372.7	0.525	4920
18200610	6	-	-	3/8”	9.5	12.0	33.0	215.0 - 311.0	0.398	3650
18200611	6	-	6	7/16”	11.0	14.0	35.0	239.0 - 347.0	0.426	4650
18200612	6	-	6	1/2”	12.7	15.5	39.0	203.0 - 306.0	0.670	5100
18200711	7	9/32”	-	7/16”	11.0	14.0	35.0	264,5 - 372.5	0.544	4650
18200712	7	9/32”	7	1/2”	12.7	15.5	39.0	239,5 - 347,5	0.721	5900
18200812	8	5/16”	-	1/2”	12.7	15.5	39.0	260.0 - 368.0	0.755	5900
18230816	8	5/16”	8	5/8”	12.7	15.5	38.0	410.0 - 461.0	1.212	7500
18200816	8	5/16”	8	5/8”	15.9	18.0	39.0	316.0 - 467.0	1.354	8580
18203816	9,5	3/8”	-	5/8”	15.9	18.0	39.0	318.0 - 459.0	1.400	9000

Open Chromed Bronzebody Turnbuckle w/Toggle, Wireterminal (182-)

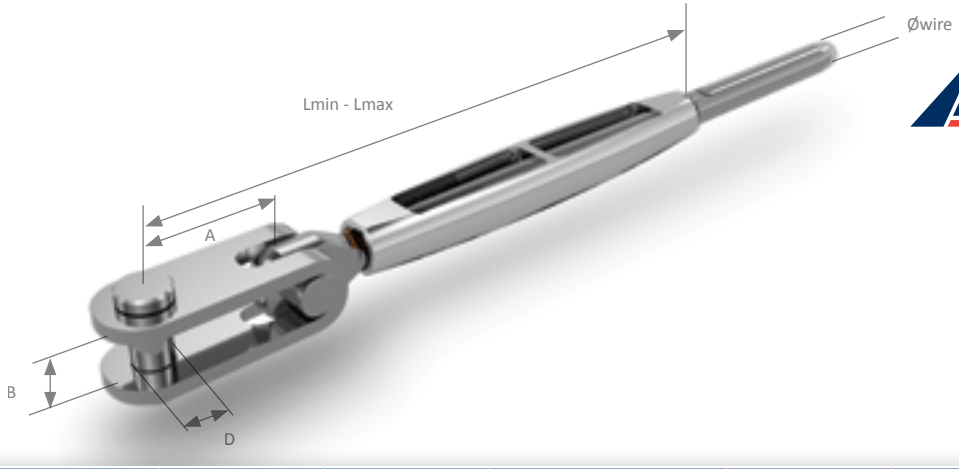

Article No.	Ø Wire			Thread UNF	D mm	B mm	A mm	Lmin - Lmax mm	Weight [kg]	Break Load [kg]
	mm	Inch	Dye							
18203820	9,5	3/8”	3/8”	3/4”	19.0	22.0	53.0	370.0 - 540.0	2.005	9900
18201016	10	-	-	5/8”	15.9	18.0	39.0	318.0 - 469.0	1.513	9000
18261020	10	-	-	3/4”	15.9	18.0	37.0	361.0 - 542.0	1.980	9430
18201020	10	-	-	3/4”	19.0	22.0	38.0	370.0 - 551.0	2.109	9430
18271620	11.1	7/16”	-	3/4”	19.0	22.0	53.0	369.5 - 550.5	2.150	11250
18201220	12	-	-	3/4”	19.0	22.0	38.0	369.5 - 550.5	2.177	10600
18201220HD	12	-	-	3/4”	19.0	22.0	53.0	372.5 - 550.5	2.300	12500
18201320	12,7	1/2”	-	3/4”	19.0	22.0	38.0	370.5 - 535.0	2.078	13250
18201322	12,7	1/2”	-	3/4”	22.0	24.0	48.0	390.0 - 550.0	2.455	13250
18201422	14	9/16”	-	7/8”	22.0	24.0	66.0	490.0 - 705.0	3.907	16550

Open Chromed Bronzebody Turnbuckle w/Eye, Wireterminal (173-)

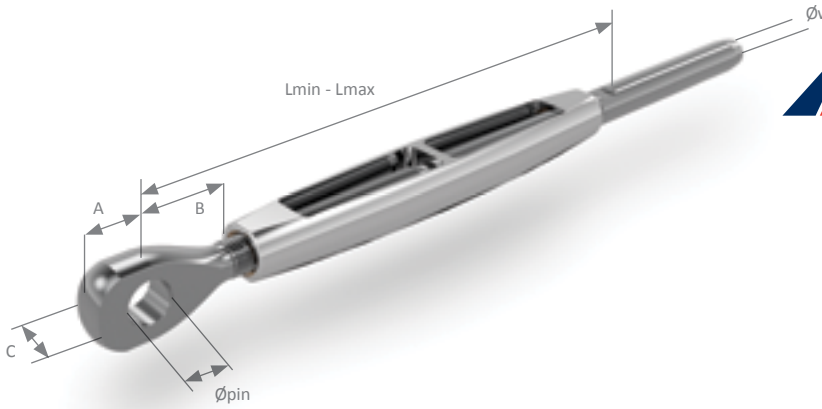

Article No.	Wire Ø			Thread UNF	Ø mm	A mm	B mm	C mm	Lmin.-Lmax. mm	Weight [kg]	Break load [kg]
	mm	inch	Dye								
17300306	3	1/8”	3	1/4”	6.5	8.5	12.5	4	129 - 197	0.09	1200
17300408	4	5/32”	-	5/16”	8.3	9.0	13.0	6	149 - 230	0.14	1550
17300510	5	3/16”	-	3/8”	9.8	11.0	16.0	8	170 - 255	0.21	2350
17300611	6	-	6	7/16”	11.1	12.5	17.5	9	196 - 292	0.34	4650
17300711	7	9/32”	-	7/16”	11.1	12.5	17.5	9	196 - 292	0.36	4650
17300613	6	-	6	1/2”	13.1	13.5	18.5	10	215 - 320	0.47	5100
17300713	7	9/32”	7	1/2”	13.1	13.5	18.5	10	217 - 322	0.52	5900
17300813	8	5/16”	-	1/2”	13.1	13.5	18.5	10	217 - 322	0.56	5900
17301016	10	-	-	5/8”	16.4	17.0	24.0	13	266 - 406	1.12	9000
17301116	11	Jul-16	-	5/8”	16.4	19.0	24.0	14	313 - 480	1.58	11250
17301119	11	7/16”	-	3/4”	19.2	21.0	28.5	17.2	316 - 485	1.61	11250
17301219	12	-	-	3/4”	19.2	21.0	28.5	17.2	314 - 481	1.69	11000
17301322	12,7	1/2”	-	3/4”	22.2	27.0	32.5	19	319 - 476	1.70	13250
17301422	14	9/16”	-	7/8”	22.2	27.0	32.5	19	382 - 575	3.05	16550

Open Chromed Bronzebody Turnbuckle w/Ball, Wireterminal (177-)

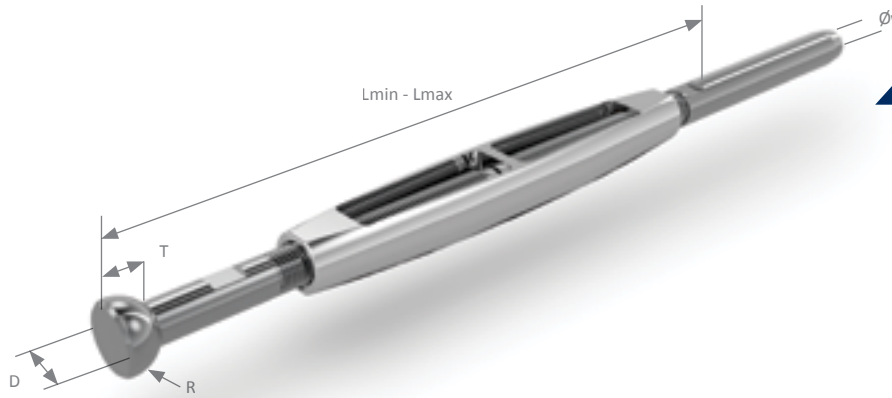

Article No.	Wire Ø			Thread UNF	D mm	R mm	T mm	Lmin.-Lmax. mm	Weight [kg]	Break load [kg]
	mm	inch	Dye							
17700306	3	1/8"	3	1/4"	14.5	7.3	6.6	133 - 200	0.071	1200
17700408	4	5/32"	-	5/16"	20.0	7.0	6.7	164 - 245	0.132	1550
17700510	5	3/16"	-	3/8"	20.0	7.0	6.7	180 - 264	0.208	2350
17700611	6	-	6	7/16"	21.5	10.8	8.6	210 - 307	0.342	4750
17710626	6	-	6	7/16"	26.0	12.0	13.2	213 - 310	376	4750
17700612	6	-	6	1/2"	20.0	7.0	6.7	222 - 328	0.447	5100
17700626	6	-	6	1/2"	26.0	12.0	13.2	228 - 334	0.472	5100
17700712	7	9/32"	7	1/2"	20.0	7.0	6.7	224 - 330	0.461	6400
17700726	7	9/32"	7	1/2"	26.0	12.0	13.2	230 - 336	0.486	6400
17700812	8	5/16"	-	1/2"	20.0	7.0	6.7	224 - 330	0.508	6400
17700826	8	5/16"	-	1/2"	26.0	12.0	13.2	230 - 336	0.533	6400
17701027	10	-	-	5/8"	27.0	13.5	14.8	301 - 441	0.925	9430
17701227	12	-	-	3/4"	27.5	13.7	14.8	328 - 496	1.475	11000
17701327	12,7	1/2"	-	3/4"	27.5	13.7	14.8	328 - 496	1.512	13100
17701417	14	9/16"	-	7/8"	34.0	16.9	15.3	385 - 580	2.540	16550

Closed Stainless Steel Bronze inserted Turnbuckle w/Toggle, Fork (191-)

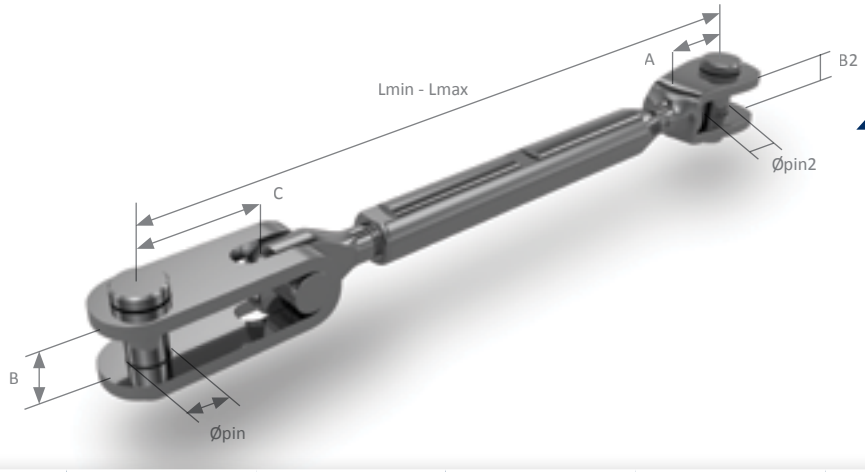

Article No	Ø Pin 1 Inch / mm	B mm	C mm	Ø Pin 2 Inch / mm	B2 mm	A mm	Lmin-Lmax mm	Break Load kg	Weight kg
19100306	1/4” / Ø6.3	8.0	14	1/4” / Ø6.3	7	13.5	-	1200	-
19100408	5/16” / Ø7.9	9.0	28.4	5/16” / Ø7.9	8.2	17.0	221.0 - 277.0	2450	-
19100510	3/8” / Ø9.5	11.0	33.0	3/8” / Ø9.5	10.0	20.0	254.0 - 317.0	3650	-
19100611	7/16” / Ø11.1	13.0	35.2	7/16” / Ø11.1	12.0	23.5	285.5 - 358.5	4650	-
19100712	1/2” / Ø12.7	14.0	38.9	1/2” / Ø12.7	14.4	26.0	314.5 - 395.5	5900	-
19130816	1/2” / Ø12.7	14.0	37.9	1/2” / Ø12.7	17.0	32.0	375.5 - 488.5	7500	-
19100816	5/8” / Ø15.9	17.5	39.3	5/8” / Ø15.9	17.0	35.0	383.5 - 496.5	9000	-
19161020	5/8” / Ø15.9	17.5	37.3	5/8” / Ø15.9	20.0	40.0	436.5 - 575.5	13250	-

Closed Stainless Steel Bronze inserted Turnbuckle w/Toggle, Wireterminal (192-)

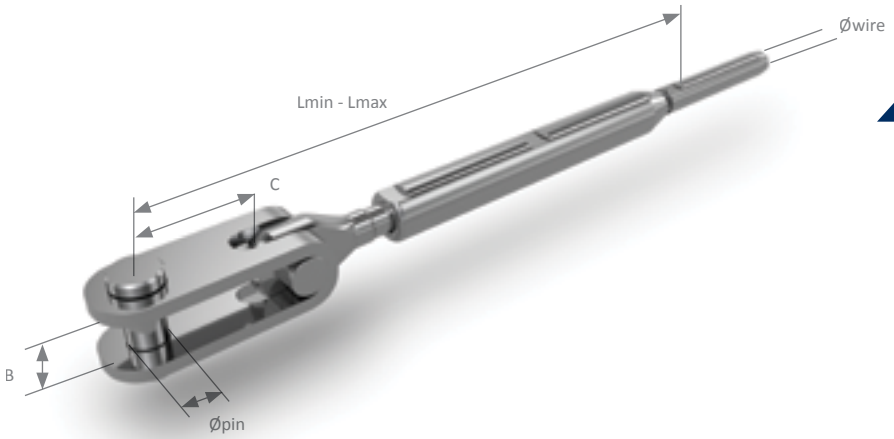

Article No.	Ø Wire			Tread UNF	Ø Pin mm	B mm	C mm	Lmin. - Lmax. mm	Weight (kg)	Break Load (kg)
	mm	inch	Dye							
19200306	3	1/8”	3	1/4”	6.3	8.0	14.0	150 - 214	0.12	1200
19200408	4	5/32”	-	5/16”	8.0	10.5	28.5	194 - 266	0.20	1550
19200508	5	3/16”	-	5/16”	8.0	10.5	28.5	195 - 268	0.24	2350
19200510	5	3/16”	-	3/8”	9.5	12.0	33.0	225 - 306	0.32	2350
19273210	5.5	7/32”	-	3/8”	9.5	12.0	33.0	230 - 302	0.39	3550
19200610	6	-	-	3/8”	9.5	12.0	33.0	229 - 311	0.40	3550
19200611	6	-	6	7/16”	11.1	14.0	35.0	239 - 347	0.43	4650
19200612	6	-	6	1/2”	12.7	15.5	39.0	223 - 306	0.67	5100
19201410	6.3	1/4”	-	3/8”	9.5	12.0	33.0	231 - 302	0.40	3650
19201411	6.3	1/4”	-	7/16”	11.1	14.0	35.0	255 - 336	0.43	4650
19201412	6.3	1/4”	1/4”	1/2”	12.7	15.5	39.0	286 - 373	0.53	4920
19200711	7	9/32”	-	7/16”	11.1	14.0	35.0	256 - 347	0.54	4650
19200712	7	9/32”	7	1/2”	12.7	15.5	39.0	279 - 367	0.72	5900
19200812	8	5/16”	-	1/2”	12.7	15.5	39.0	280 - 368	0.76	5900
19230816	8	5/16”	8	5/8”	12.7	15.5	38.0	333 - 461	1.21	7500
19200816	8	5/16”	8	5/8”	15.9	18.0	39.0	338 - 467	1.35	8580
19203816	9.5	3/8”	-	5/8”	15.9	18.0	39.0	340 - 469	1.40	9000

Closed Stainless Steel Bronze inserted Turnbuckle w/Toggle, Wireterminal (192-)

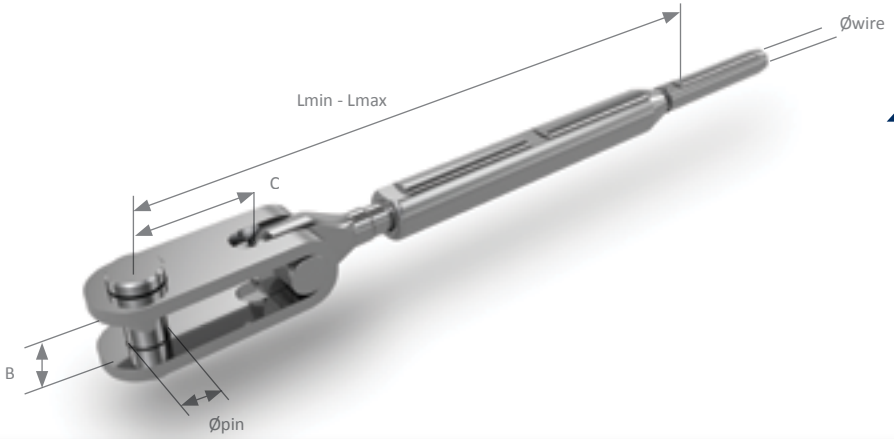

Article No.	Ø Wire			Tread UNF	Ø Pin mm	B mm	C mm	Lmin. - Lmax. mm	Weight (kg)	Break Load (kg)
	mm	inch	Dye							
19203820	9.5	3/8”	3/8”	3/4”	19.1	22.0	53.0	400 - 550	2.00	9900
19201016	10	-	-	5/8”	15.9	17.5	47.5	355 - 469	1.49	9000
19261020	10	-	-	3/4”	15.9	18.0	37.0	390 - 542	1.98	9430
19201020	10	-	-	3/4”	19.1	22.0	38.0	400 - 552	2.10	9430
19271620	11.1	7/16”	-	3/4”	19.1	22.0	53.0	398 - 550	2.15	11250
19201220	12	-	-	3/4”	19.1	21.5	53.0	420 - 554	2.74	11000
19201220HD	12	-	-	3/4”	19.1	21.5	53.0	398 - 550	2.30	13250
192D1222	-	-	12	7/8”	22.2	24.0	66.5	490 - 708	4.27	18700
19201320	12.7	1/2”	-	3/4”	19.1	22.0	38.0	400 - 535	2.08	13250
19201322	12.7	1/2”	-	3/4”	22.2	24.0	48.0	421 - 550	2.46	13250
19201422	14	9/16”	-	7/8”	22.2	24.0	66.5	481 - 699	4.20	16550
19201625	16	5/8”	-	1”	25.4	28.0	64.0	524 - 684	5.91	21350
19201625-2	16	5/8”	-	1”	25.4	28.0	64.0	547 - 779	6.30	21350
19201628	16	5/8”	-	1”	28.6	31.5	80.0	549 - 765	6.73	21350
19201928	19	3/4”	-	1 1/8”	28.6	31.5	72.0	608 - 866	8.37	30000
19201932	19	3/4”	-	1 1/4”	31.8	36.5	82.5	610 - 826	10.62	33150
19202232	22	7/8”	-	1 1/4”	31.8	36.5	81.6	627 - 809	11.38	35250
19202232-2	22	7/8”	-	1 1/4”	31.8	36.5	82.6	714 - 1020	12.47	37200
19202635	25.4 - 26	1”	-	1 1/2”	34.9	42.0	82.0	703 - 885	16.30	49000
19202635-2	25.4 - 26	1”	-	1 1/2”	34.9	42.0	95.0	807 - 1163	17.46	49000

Closed Stainless Steel Bronze inserted Turnbuckle w/Eye, Wireterminal (193-)

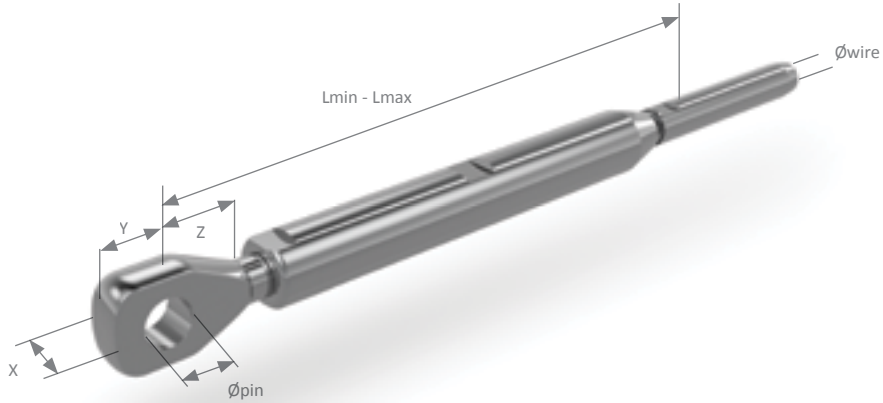

Article No.	Wire Ø			Thread UNF	Ø mm	Y mm	Z mm	X mm	Lmin.-Lmax. mm	Weight [kg]	Break load [kg]
	mm	inch	Dye								
19300306	3	1/8"	3	1/4"	6.5	8.5	12.5	4	100 - 158	0.09	1200
19300408	4	5/32"	-	5/16"	8.3	9.0	13.0	6	115 - 185	0.14	1550
19300510	5	3/16"	-	3/8"	9.8	11.0	16.0	8	133 - 203	0.21	2350
19300611	6	-	6	7/16"	11.1	12.5	17.5	9	152 - 231	0.34	4650
19300711	7	9/32"	-	7/16"	11.1	12.5	17.5	9	150 - 229	0.36	4650
19300613	6	-	6	1/2"	13.1	13.5	18.5	10	162 - 247	0.47	5100
19300713	7	9/32"	7	1/2"	13.1	13.5	18.5	10	160 - 245	0.52	5900
19300813	8	5/16"	-	1/2"	13.1	13.5	18.5	10	161 - 246	0.56	5900
19301016	10	-	-	5/8"	16.4	17.0	24.0	13	195 - 311	1.12	9000
19301219	12	-	-	3/4"	19.2	21.0	28.5	17.2	232 - 369	1.69	11000
19301322	12,7	1/2"	-	3/4"	22.2	27.0	32.5	19	229 - 366	1.70	13250
19301422	14	9/16"	-	7/8"	22.2	27.0	32.5	19	287 - 447	3.05	16550
19301625	16	5/8"	-	1"	25.6	30.0	37.0	21	277 - 468	5.06	21350
19301928	19	3/4"	-	1 1/4"	28.6	30.0	43.0	25	314 - 527	6.19	29400
19302232	22	7/8"	-	1 1/4"	32.0	32.0	45.0	28	362 - 516	6.92	35250
19302635	25.4-26	1"	-	1 1/2"	35.2	38.0	52.5	32	567- 751	12.60	46700
19602225	22	7/8"	-	1 1/4"	48.2	24.8	19.8	535 - 690	6.835	33150	
19602638	26	1"	-	1 1/2"	-	-	-	-	-	-	

Closed Stainless Steel Bronze inserted Turnbuckle w/Fork, Wireterminal (194-)

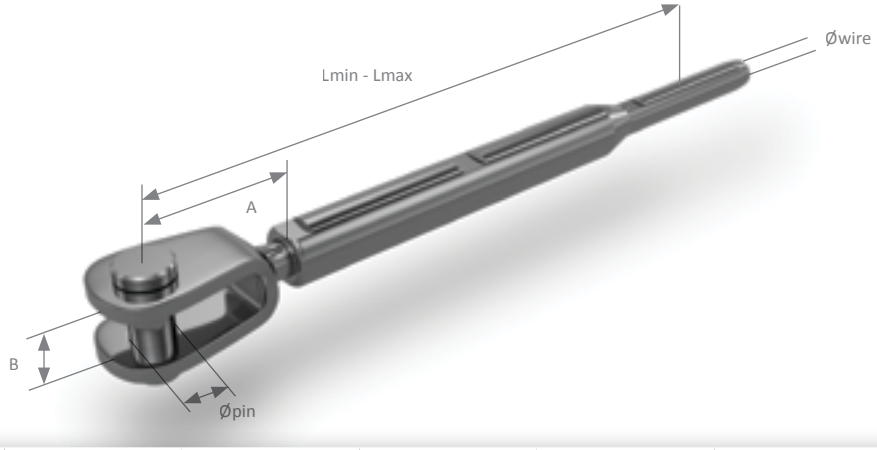

Article No.	Wire Ø			Thread UNF	Øpin mm	A mm	B mm	Lmin.-Lmax. mm	Weight [kg]	Break load [kg]
	mm	Inch	Dye							
19400306	3	1/8"	3	1/4"	6.3	13.0	7.0	144 - 208	0.106	1200
19400408	4	5/32"	-	5/16"	8.0	17.0	8.0	169 - 241	0.174	1550
19400510	5	3/16"	-	3/8"	9.5	19.0	10.0	191 - 272	0.329	2350
19400610	6	-	-	3/8"	9.5	19.0	10.0	194 - 275	0.365	3650
19400611	6	-	6	7/16"	11.0	24.0	12.0	224 - 315	0.396	4750
19400712	7	9/32"	7	1/2"	12.7	25.0	14.5	250 - 350	0.592	6400
19430816	8	5/16"	8	5/8"	12.7	32.5	17.0	308 - 435	1.002	8580
19400816	8	5/16"	8	5/8"	16.0	35.0	17.0	310 - 437	1.116	8580
19461020	10	-	-	3/4"	16.0	39.5	20.0	360 - 511	1.686	9430
19401020	10	-	-	3/4"	19.0	45.0	20.0	365 - 516	1.689	9430
19401220	12	-	-	3/4"	19.0	45.0	20.0	365 - 516	1.815	11000
19401220HD	12	-	-	3/4"	19.0	45.0	20.0	358 - 509	2.026	13250
19401422	14	9/16"	-	7/8"	22.0	54.0	24.0	436 - 613	3.266	16550
19401625	16	5/8"	-	1"	25.4	66.0	26.0	457 - 678	4.304	21350

Closed Stainless Steel Bronze inserted Turnbuckle w/Ball, Wireterminal (196-)

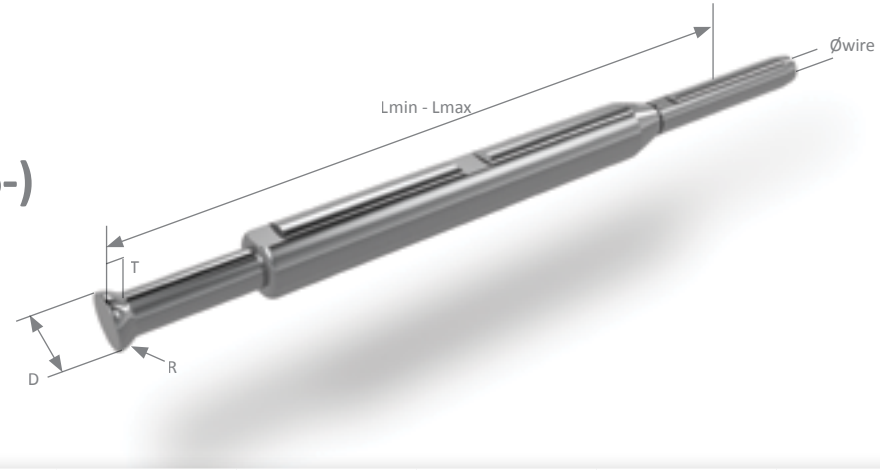

Article No.	Wire Ø			Thread UNF	D mm	R mm	T mm	Lmin.-Lmax. mm	Weight [kg]	Break load [kg]
	mm	inch	Dye							
19600306	3	1/8"	3	1/4"	14.5	7.3	6.6	143 - 200	0.071	1200
19600408	4	5/32"	-	5/16"	20.0	7.0	6.7	176 - 245	0.132	1550
19600510	5	3/16"	-	3/8"	20.0	7.0	6.7	195 - 264	0.208	2350
19600611	6	-	6	7/16"	21.5	10.8	8.6	227 - 307	0.342	4750
19610626	6	-	6	7/16"	26.0	12.0	0.132	230 - 310	376	4750
19600612	6	-	6	1/2"	20.0	7.0	6.7	242 - 328	0.447	5100
19600626	6	-	6	1/2"	26.0	12.0	13.2	248 - 334	0.472	5100
19600712	7	9/32"	7	1/2"	20.0	7.0	6.7	244 - 330	0.461	6400
19600726	7	9/32"	7	1/2"	26.0	12.0	13.2	250 - 336	0.486	6400
19600812	8	5/16"	-	1/2"	20.0	7.0	6.7	244 - 330	0.508	6400
19600826	8	5/16"	-	1/2"	26.0	12.0	13.2	250 - 336	0.533	6400
19601027	10	-	-	5/8"	27.0	13.5	14.8	325 - 441	0.925	9430
19601227	12	-	-	3/4"	27.5	13.7	14.8	358 - 496	1.475	11000
19601327	12,7	1/2"	-	3/4"	27.5	13.7	14.8	358 - 496	1.512	13100
19601417	14	9/16"	-	7/8"	34.0	17.0	14.3	420 - 600	2.415	16550
19601622	16	5/8"	-	1"	43.2	21.8	18.0	610 - 765	5.010	21350
19601925	19	3/4"	-	1 1/4"	48.2	24.8	19.8	535 - 690	6.145	33150
19602225	22	7/8"	-	1 1/4"	48.2	24.8	19.8	535 - 690	6.835	33150
19602638	26	1"	-	1 1/2"	-	-	-	-	-	-

WWW.DRAGONFLY.DK

Ball Terminal (WB- WDB-)

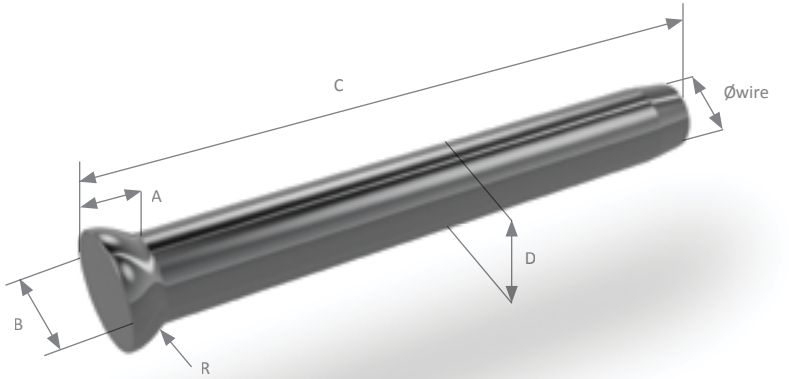

Article No.	Wire Ø			A mm	B mm	C mm	R mm	Weight [kg]	Break load [kg]
	mm	Inch	Dye						
WB03106	3	1/8”	3	5.0	12.6	50.2	6.3	0.012	1200
WB04007	4	5/32”	4	6.0	14.6	61.7	7.3	0.020	1550
WDB04009	-	-	4	6.7	17.5	67.5	8.8	0.035	2750
WB04909	5	3/16”	-	6.7	17.5	74.0	8.8	0.035	2350
WDB05011	-	-	5	8.3	21.5	75.5	10.8	0.057	3900
WB05611	5.5	7/32”	-	8.3	21.5	84.0	10.8	0.060	3550
WB06011	6	-	6	7.6	21.5	89.0	10.8	0.082	5100
WB06411	6.3	1/4”	1/4”	7.6	21.5	91.5	10.8	0.079	4920
WB07011	7	9/32”	7	9.3	21.5	99.5	10.8	0.112	6200
WB07012	7	9/32”	7	9.7	24.6	100.0	12.3	0.118	6850
WB08014	8	5/16”	8	10.7	27.5	110.0	13.8	0.164	8550
WB09516	9.5	3/8”	3/8”	12.6	31.5	125.0	15.8	0.227	9900
WB10014	10	-	-	12.2	27.6	133.0	13.8	0.236	9600
WB10016	10	-	-	11.8	31.5	134.0	15.8	0.236	9430
WDB10018	-	-	10	13.8	35.6	135.0	17.8	0.318	12850
WB11114	11.1	7/16”	-	13.2	27.6	142.5	13.8	0.267	10600
WB11118	11.1	7/16”	-	13.8	35.5	142.5	17.8	0.307	11250
WB12018	12	-	-	13.8	35.5	152.0	17.8	0.311	11000
WB12020HD	12	-	-	15.4	39.5	159.0	19.8	0.414	13200
WDB12022	-	-	12	17.4	43.6	160.5	21.8	0.604	19500
WB12720	12.7	1/2”	-	15.4	39.5	167.0	19.8	0.412	13100
WDB12722	-	-	1/2”	17.4	43.6	168.6	21.8	0.608	18380
WB14122	14	9/16”	-	17.4	43.5	182.0	21.8	0.615	16550
WB16025	16	5/8”	-	20.0	49.5	201.0	24.8	0.858	21350
WB19025	19	3/4”	-	24.0	49.4	245.6	24.8	1.405	31245

Eye Terminal
(24- 44- WE- WDE-)

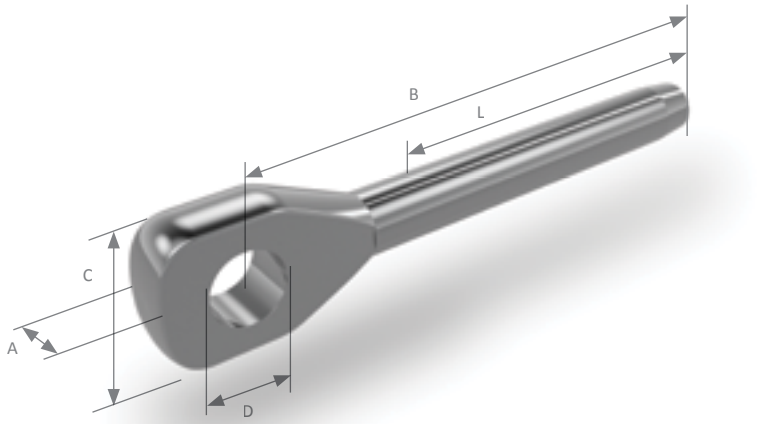

Article No.	Wire Ø			Pin Ø inch	Ø mm	A mm	B mm	C mm	DBS mm	Weight [kg]	Break load [kg]
	mm	inch	Dye								
240025	2.5	3/32”	-	1/4”	6.4	5.0	57.0	15.0	6.22 - 6.35	0.018	1200
240003	3	1/8”	3	1/4”	6.4	5.0	55.5	15.0	6.22 - 6.35	0.017	1200
240004	4	5/32”	-	5/16”	8.1	7.0	64.0	16.5	7.42 - 7.50	0.024	1570
WDE04096	-	-	4	3/8”	9.6	8.0	72.0	21.5	9.00 - 9.11	0.050	2750
240005	5	3/16”	-	3/8”	9.6	7.5	76.0	19.5	9.00 - 9.11	0.046	2350
WDE05096	-	-	5	3/8”	9.6	9.0	77.0	21.5	10.72 - 10.85	0.071	3250
441732	5.5	7/32”	-	3/8”	9.6	10.0	84.0	21.5	10.72 - 10.85	0.072	3550
440732	5.5	7/32”	-	7/16”	11.1	10.0	84.0	21.5	10.72 - 10.85	0.070	3550
241106	6	-	6	7/16”	11.3	10.0	90.0	24.5	12.42 - 12.55	0.098	5100
240006	6	-	6	1/2”	12.8	10.0	86.0	24.5	12.42 - 12.55	0.104	5100
440014	6.3	1/4”	1/4”	1/2”	12.8	11.0	93.0	24.0	-	0.102	4920
443814	6.3	1/4”	-	3/8”	9.6	11.0	93.0	24.0	-	0.107	4500
240007	7	9/32”	7	1/2”	12.8	10.0	100.0	27.0	12.50 - 12.70	0.128	6500
241107	7	9/32”	-	7/16”	11.1	9.8	100.0	27.0	12.50 - 12.70	0.125	6100
241308	8	5/16”	8	1/2”	12.8	10.0	108.0	29.0	14.07 - 14.30	0.169	7800
240008	8	5/16”	8	5/8”	16.2	13.6	112.5	30.5	14.07 - 14.30	0.199	8550
441238	9.5	3/8”	-	1/2”	12.8	13.5	130.5	33.0	-	0.262	9900
440038	9.5	3/8”	-	5/8”	16.2	13.0	130.5	33.0	-	0.275	9900

Eye Terminal
(24- 44- WE- WDE-)

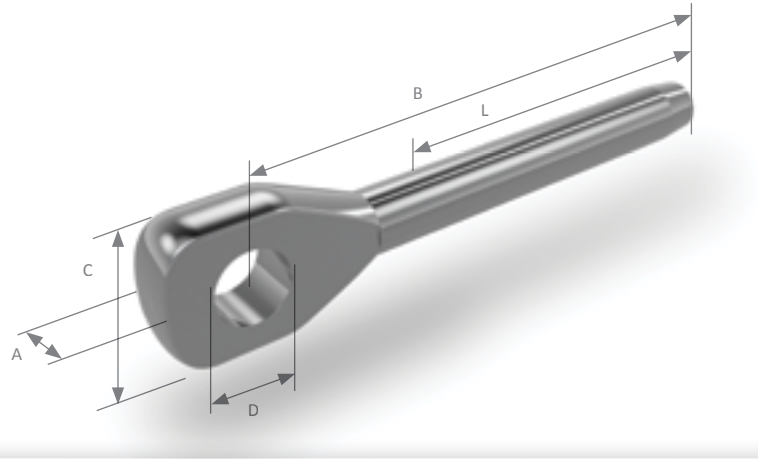

Article No.	Wire Ø			Pin Ø inch	Ø mm	A mm	B mm	C mm	DBS mm	Weight [kg]	Break load [kg]
	mm	inch	Dye								
245810	10	-	-	5/8”	16.2	14.0	134.0	33.5	17.73 - 17.86	0.270	9400
240010	10	-	-	3/4”	19.2	16.0	137.5	36.0	17.73 - 17.86	0.331	9400
WDE1019	-	-	10	3/4”	19.2	16.4	141.5	37.0	19.63 - 19.83	0.363	12850
440716	11.1	7/16”	-	3/4”	19.2	17.0	150.0	40.0	19.63 - 19.83	0.388	11250
243412	12	-	-	3/4”	19.2	17.9	156.5	40.0	19.95 - 20.00	0.398	11000
240012	12	-	-	7/8”	22.2	19.1	178.5	45.0	19.95 - 20.00	0.523	11000
WE12220HD	12	-	-	7/8”	22.2	19.0	186.5	45.0	21.31 - 21.44	0.550	14300
WDE1222	-	-	12	7/8”	22.2	19.0	-	44.0	24.88 - 25.00	0.760	19500
440012	-	1/2”	-	3/4”	19.2	18.0	173.0	38.0	21.31 - 21.44	0.453	13100
447812	-	1/2”	-	7/8”	22.2	19.9	186.5	42.0	21.31 - 21.44	0.569	13100
243414	14	9/16”	-	3/4”	19.2	17.9	184.5	45.0	24.88 - 25.00	0.670	16550
240014	14	9/16”	-	7/8”	22.2	19.0	180.5	42.0	24.88 - 25.00	0.650	16550
24HD14	-	-	14	7/8”	22.2	19.0	193	43.5	-	0.703	21350
242514	14	-	-	1”	25.6	21.0	189.4	52.0	24.88 - 25.00	0.840	22500
240016	16	5/8”	-	1”	25.6	22.0	207.0	52.0	28.05 - 28.17	1.020	21350
240019	19	3/4”	-	1 1/8”	28.7	25.0	233.0	55.0	34.40 - 34.50	1.760	30150
240020	20	-	-	1 1/8”	28.7	25.0	239.0	55.0	34.40 - 34.50	1.550	31250
240022	22	7/8”	-	1 1/4”	32.2	28.5	252.0	62.0	40.21 - 40.46	2.285	43000
240026	25-26	1”	-	1 3/8”	35.5	32.0	314.0	69.0	45.77 - 46.02	3.450	46700

Fork Terminal
(25- WF- WDF-)

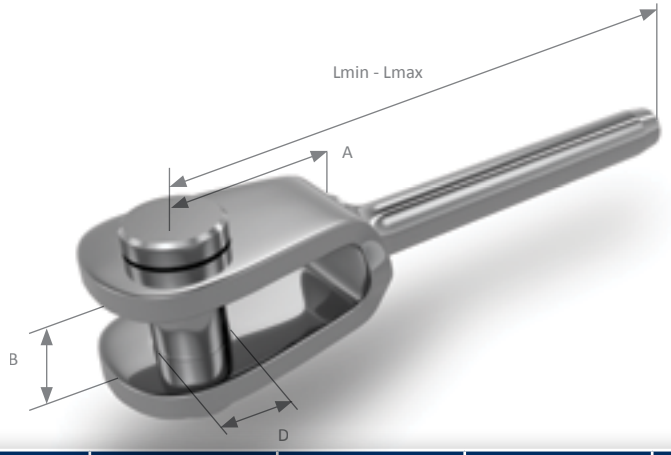

Article No.	Wire Ø			D mm	A mm	B mm	C mm	Weight [kg]	Break load [kg]
	mm	inch	Dye						
250025	2.5	3/32"	-	5.0	11.5	7.0	65.0	0.023	1284
250053	3	1/8"	3	5.0	11.5	7.0	65.0	0.023	1089
250003	3	1/8"	3	6.3	13.0	7.0	66.5	0.028	1089
250054	4	5/32"	-	5.0	11.5	7.0	72.5	0.025	1437
250064	4	5/32"	-	6.3	13.0	7.0	73.5	0.032	1437
250004	4	5/32"	-	8.0	17.0	8.0	78.5	0.050	1437
WDF4095	4	-	4	9.5	19.0	10.0	-	-	-
250085	5	3/16"	-	8.0	17.0	8.0	85.5	0.058	2147
250005	5	3/16"	-	9.5	19.0	10.0	87.5	0.076	2147
WDF5011	5	-	5	11.0	24.0	12.0	-	-	-
450732	5.5	7/32"	-	11.0	24.0	12.0	108.0	0.108	3117
251006	6	-	6	9.5	19.0	10.0	100.0	0.116	4494
251106	6	-	6	11.0	24.0	12.0	105.0	0.150	4494
250006	6	-	6	12.7	25.0	14.5	106.0	0.176	4494
450014	6.3	1/4"	1/4"	12.7	25.0	14.5	108.0	0.180	4332
250007	7	9/32"	7	12.7	25.0	14.5	116.0	0.193	5736
251108	8	5/16"	-	11.0	24.0	12.0	123.0	-	7138
2512708	8	5/16"	-	12.7	25.0	14.5	124.0	-	7138
251308	8	5/16"	8	12.7	32.5	17.0	133.0	0.243	7138
250008	8	5/16"	8	16.0	35.0	17.0	135.0	0.344	7138

Fork Terminal
(25- WF- WDF-)

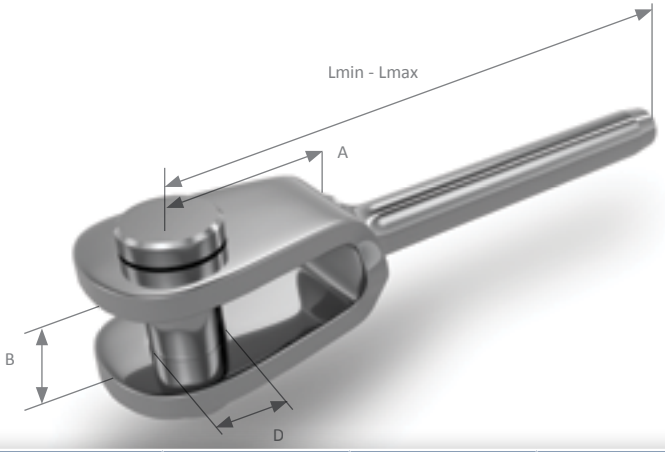

Article No.	Wire Ø			D mm	A mm	B mm	C mm	Weight [kg]	Break load [kg]
	mm	inch	Dye						
450038	9.5	3/8"	-	16.0	40.0	20.0	157.0	0.453	8245
251610	10	-	-	16.0	40.0	20.0	166.0	0.514	7847
250010	10	-	-	19.0	45.0	20.0	170.0	0.638	7847
WDF1019	10	-	10	19.0	45.0	20.0	-	-	-
450716	11.1	7/16"	-	19.0	45.0	20.0	170.0	0.670	9381
251912	12	-	-	19.0	45.0	20.0	184.0	0.715	11006
WF190120HD	12	-	-	19.0	45.0	20.0	184.0	0.660	13217
250012	12	-	-	22.0	54.0	24.0	195.0	0.950	11006
WDF1222	12	-	12	22.0	54.0	24.0	-	-	-
WDF12722	12.7	-	1/2"	22.0	54.0	24.0	-	-	-
250014	14	9/16"	-	22.0	54.0	24.0	220.0	1.213	16550
250016	16	5/8"	-	25.0	66.0	26.0	251.0	1.878	17429
WF280180	18	-	-	28.0	75.0	28.0	282.0	-	26996
250019	19	3/4"	-	28.0	75.0	28.0	285.0	2.896	26996
250020	20	-	-	28.0	75.0	28.0	292.0	-	25496
250028	28	-	-	35.0	80.0	38.0	376.0	-	52106

Toggle Terminal (35- WDDT-)

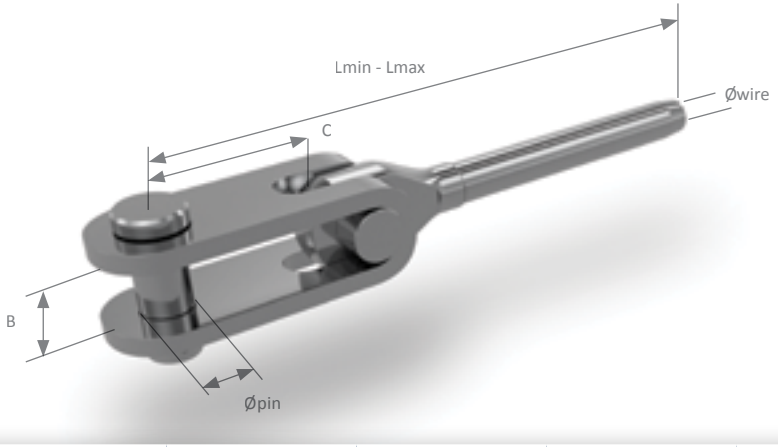

Article No.	Wire Ø			Øpin mm	C mm	B mm	L mm	Weight [kg]	Break load [kg]
	mm	inch	Dye						
350003	3	1/8”	3	6.3	14.0	8.0	73.0	0.04	1200
350004	4	5/32”	-	8.0	26.0	10.5	99.0	0.08	1550
WDDT410	4	-	4	9.5	29.0	12.0	-	-	2750
350005	5	3/16”	-	9.5	29.0	12.0	114.5	0.16	2350
WDDT510	5	-	5	9.5	31.5	11.0	120.8	0.19	3250
WDDT511	5	-	5	11.0	31.5	11.0	120.8	0.18	3250
350732	5,5	7/32”	-	11.0	31.5	14.0	135.0	0.17	3550
351106	6	-	6	11.0	31.5	14.0	136.0	0.27	5100
350006	6	-	6	12.7	36.0	15.5	140.0	0.33	5100
350014	6.3	1/4”	1/4”	12.7	36.0	15.5	124.0	0.28	4920
350007	7	9/32”	7	12.7	34.5	15.5	152.5	0.34	6500
351208	8	5/16”	8	12.7	33.5	15.5	160.5	0.68	7800
350008	8	5/16”	8	15.9	35.0	18.0	167.0	0.58	8550
350038	9.5	3/8”	3/8”	15.9	32.5	18.0	206.0	0.61	9900
355810	10	-	-	15.9	32.5	18.0	188.0	0.69	9400
350010	10	-	-	19.0	37.0	22.0	196.5	0.91	9400
WDDT1019	10	-	10	19.0	37.0	22.0	-	-	12850

T-Terminal
(26-)

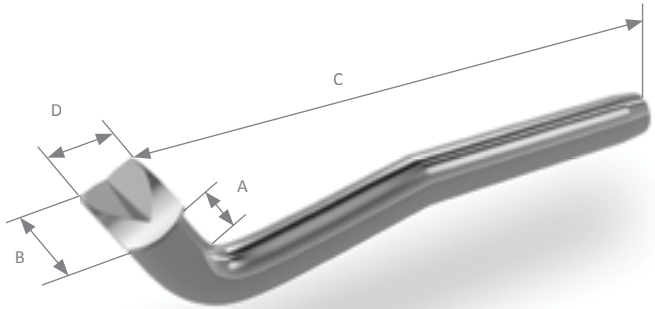

Article No.	Wire Ø		A mm	B mm	C mm	D mm	Weight [kg]	Safe Work load [kg]	Break load [kg]
	mm	inch							
260002	2.0	-	6	17.0	78	5.7	0.021	325	600
260025	2.5	7/32	7	17.0	78	6.4	0.023	450	690
260003	3.0	1/8	8	17.0	78	6.4	0.021	550	830
260004	4.0	5/32	8	17.5	101	7.5	0.038	750	1470
260005	5.0	3/16	8	20.5	110	9.0	0.055	1150	2300
460732	5.5	17/32	9	26.0	125	11.0	0.100	1450	2850
260006	6.0	-	9	31.5	138	12.7	0.157	1650	3300
460014	6.3	1/4	11	31.5	150	12.7	0.160	1850	3700
260007	7.0	9/32	12.5	32.5	150	14.0	0.210	2050	4100
260008	8.0	5/16	13.5	34.5	175	16.0	0.309	2500	5350
460038	9.5	3/8	13	39.0	205	18.0	0.420	3250	7550
260010	10.0	-	15	39.0	185	18.0	0.407	3600	8350

Hook Terminal (280-)

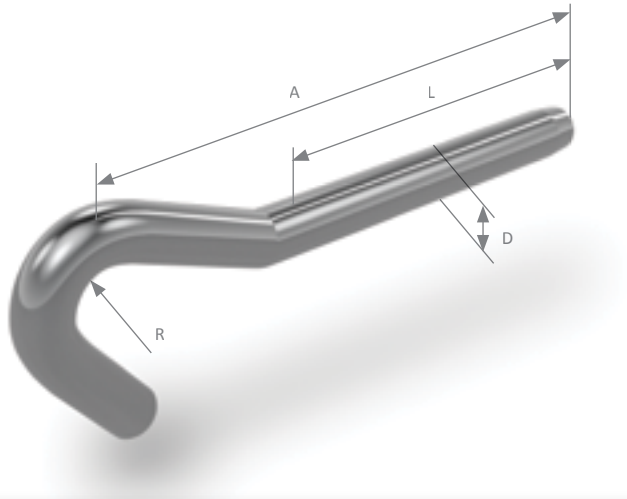

Article No.	Wire Ø mm	D mm	L mm	A mm	R mm	Weight [kg]	Safe Work Load [kg]
280025	2.5	6.35	32	57.5	4	0.018	500
280003	3.0	6.35	32	57.5	4	0.019	500
280004	4.0	7.50	45	75.5	6	0.033	1000
280005	5.0	9.00	51	101.0	6	0.063	1500

Rope Terminal (290-)

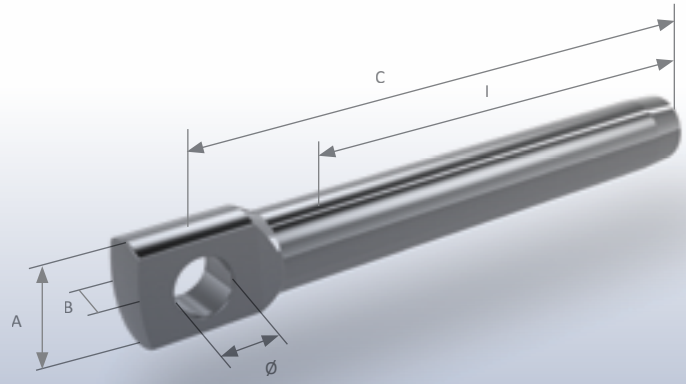

Article No.	Wire Ø mm	Ø mm	A mm	B mm	C mm	D mm	L mm	Weight [kg]	Break load [kg]
290003	3	5.1	9.5	5.0	47	6.35	35	0.009	500
290004	4	5.1	9.5	5.0	57	7.50	40	0.016	800

Lifeline Terminal (300-)

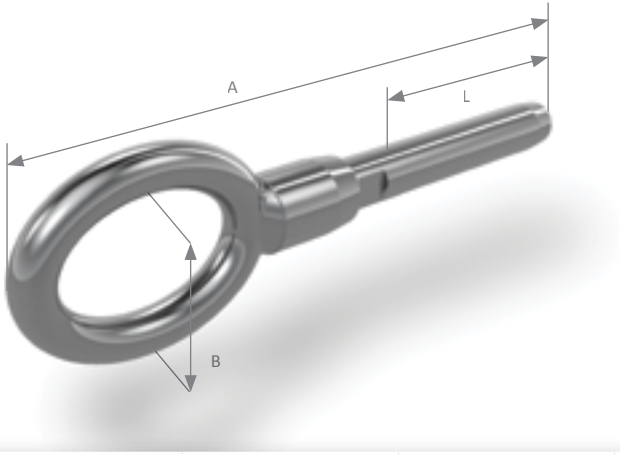

Article No.	Wire Ø mm	D mm	L mm	A mm	B mm	t mm	Weight [kg]	Break load [kg]
300003	3.0	6.35	32	90	24	6	0.045	1170
300004	4.0	7.5	38	97	24	6	0.049	1600
300005	5.0	9.11	45	106	24	6	0.058	2200
300007	7.0	14.3	50	113	24	6	0.099	2360

Threaded Swage Terminal, Metric thread (21- 31- WS-)

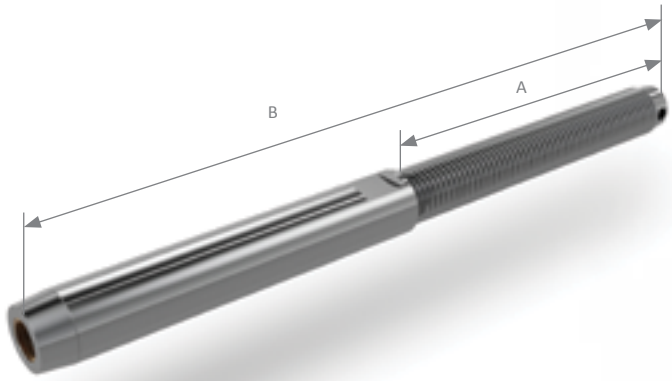

Article No.	Wire Ø			Thread metric	A mm	B mm	DBS before swaging mm	Weight [kg]	Break load [kg]
	mm	inch	Dye						
212505	2.5	3/32”	-	M5	43	87	6.22 - 6.35	0.014	880
312505	2.5	3/32”	-	M5LH	43	87	6.22 - 6.35	0.014	880
210306	3	1/8”	3	M6	48	98	6.22 - 6.35	0.018	1200
310306	3	1/8”	3	M6 LH	48	98	6.22 - 6.35	0.018	1200
210406	4	5/32”	-	M6	48	105	7.42 - 7.50	0.022	1300
310406	4	5/32”	-	M6 LH	48	105	7.42 - 7.50	0.022	1300
210408	4	5/32”	-	M8	55	112	7.42 - 7.50	0.031	1550
310408	4	5/32”	-	M8 LH	55	112	7.42 - 7.50	0.031	1550
210508	5	3/16”	-	M8	55	120	9.00 - 9.11	0.040	2350
310508	5	3/16”	-	M8 LH	55	120	9.00 - 9.11	0.040	2350
210510	5	3/16”	-	M10	63	128	9.00 - 9.11	0.054	2350
310510	5	3/16”	-	M10 LH	63	128	9.00 - 9.11	0.054	2350
210610	6	-	-	M10	63	143	12.42 - 12.55	0.092	3750
310610	6	-	-	M10 LH	63	143	12.42 - 12.55	0.092	3750
210612	6	-	6	M12	80	160	12.42 - 12.55	0.117	5100
310612	6	-	6	M12 LH	80	160	12.42 - 12.55	0.117	5100
210714	7	9/32”	7	M14	90	181	14.18 - 14.30	0.167	6500
310714	7	9/32”	7	M14 LH	90	181	14.18 - 14.30	0.167	6500

Threaded Swage Terminal, Metric thread (21- 31- WS-)

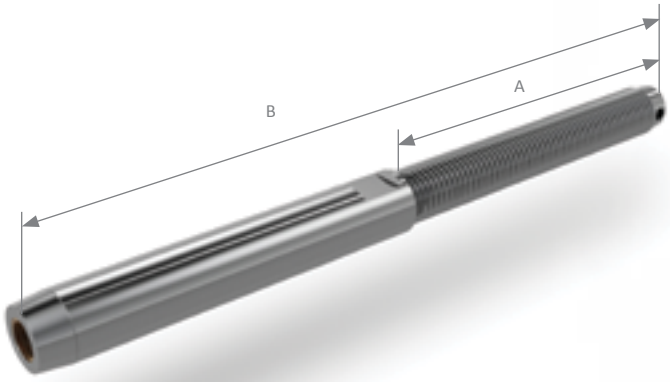

Article No.	Wire Ø			Thread metric	A mm	B mm	DBS before swaging mm	Weight [kg]	Break load [kg]
	mm	inch	Dye						
210812	8	5/16”	-	M12	80	178	16.01 - 16.13	0.305	5100
210814	8	5/16”	-	M14	90	188	16.01 - 16.13	0.215	7100
310814	8	5/16”	-	M14 LH	90	188	16.01 - 16.13	0.215	7100
210816	8	5/16”	8	M16	101	199	16.01 - 16.13	0.251	8580
310816	8	5/16”	8	M16 LH	101	199	16.01 - 16.13	0.251	8580
211016	10	-	-	M16	101	220	17.73 - 17.86	0.290	9320
311016	10	-	-	M16 LH	101	220	17.73 - 17.86	0.290	9320
211020	10	-	-	M20	120	237	17.73 - 17.86	0.391	9430
311020	10	-	-	M20 LH	120	237	17.73 - 17.86	0.391	9430
211220	12	-	-	M20	120	254	19.95 - 20.00	0.463	10600
311220	12	-	-	M20 LH	120	254	19.95 - 20.00	0.463	10600
WS120M20HD	12	-	-	M20	120	254	21.31 - 21.44	0.515	12550
WS120M20LHD	12	-	-	M20 LH	120	254	21.31 - 21.44	0.515	12550
211424	14	9/16”	-	M24	156	317	24.88 - 25.00	0.860	16550
311424	14	9/16”	-	M24 LH	156	317	24.88 - 25.00	0.860	16550
211627	16	5/8”	-	M27	178	358	28.05 - 28.17	1.350	21350
311627	16	5/8”	-	M27 LH	178	358	28.05 - 28.17	1.350	21350
211930	19	3/4”	-	M30	209	420	34.40 - 34.50	2.170	30000
311930	19	3/4”	-	M30 LH	209	420	34.40 - 34.50	2.170	30000
212030	20	-	-	M30	209	420	34.40 - 34.50	2.150	30000
312030	20	-	-	M30 LH	209	420	34.40 - 34.50	2.150	30000

Threaded Swage Terminal, UNF thread (23- 33- 43- WS- WDS-)

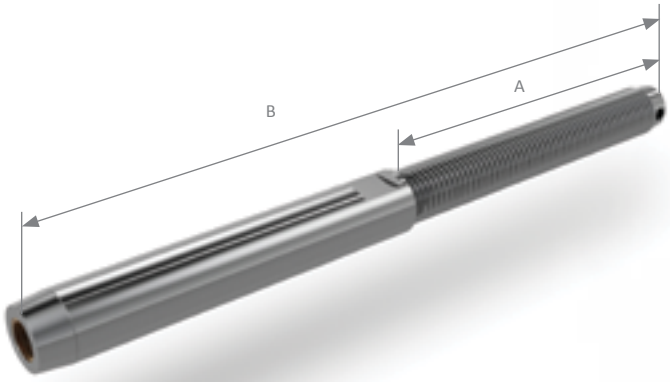

Article No.	Wire Ø			Thread UNF	A mm	B mm	Weight [kg]	Break load [kg]
	mm	inch	Dye					
230306	3	1/8”	3	1/4”	48	98	0.018	1200
330306	3	1/8”	3	1/4”LH	48	98	0.018	1200
230406	4	5/32”	-	1/4”	48	105	0.023	1550
330406	4	5/32”	-	1/4” LH	48	105	0.023	1550
230408	4	5/32”	-	5/16”	55	112	0.030	1550
330408	4	5/32”	-	5/16” LH	55	112	0.030	1550
WDS40U516	4	-	4	5/16”	55	112	-	2450
WDS40U516L	4	-	4	5/16” LH	55	112	-	2450
230508	5	3/16”	-	5/16”	55	120	0.039	2350
330508	5	3/16”	-	5/16” LH	55	120	0.039	2350
230510	5	3/16”	-	3/8”	63	128	0.053	2350
330510	5	3/16”	-	3/8” LH	63	128	0.053	2350
WDS50U38	5	-	5;3/16”	3/8”	63	128	0.067	3650
WDS50U38L	5	-	5;3/16”	3/8” LH	63	128	0.067	3650
437320	5.5	7/32”	-	3/8”	63	140	0.072	3550
230610	6	-	-	3/8”	63	143	0.092	3650
330610	6	-	-	3/8” LH	63	143	0.092	3650
230611	6	-	6	7/16”	71	151	0.112	4750
330611	6	-	6	7/16” LH	71	151	0.112	4750
230612	6	-	6	1/2”	80	163	0.137	5100
330612	6	-	6	1/2” LH	80	163	0.137	5100
431410	6.3	1/4”	-	3/8”	63	146	0.093	3650
431411	6.3	1/4”	-	7/16”	71	154	0.113	4750

Threaded Swage Terminal, UNF thread (23- 33- 43- WS- WDS-)

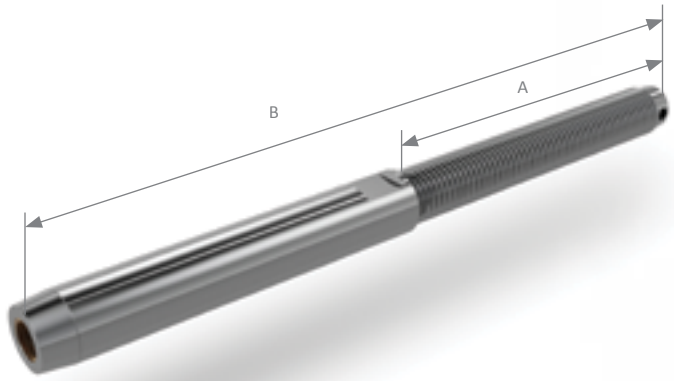

Article No.	Wire Ø			Thread UNF	A mm	B mm	Weight [kg]	Break load [kg]
	mm	inch	Dye					
431412	6.3	1/4”	1/4”	1/2”	80	165	0.138	4920
230711	7	9/32”	-	7/16”	71	163	0.132	4750
330711	7	9/32”	-	7/16” LH	71	163	0.132	4750
230712	7	9/32”	7;9/32”	1/2”	80	171	0.151	6400
330712	7	9/32”	7;9/32”	1/2” LH	80	171	0.151	6400
230812	8	5/16”	-	1/2”	80	178	0.198	6400
330812	8	5/16”	-	1/2” LH	80	178	0.198	6400
230816	8	5/16”	8	5/8”	101	199	0.262	8580
330816	8	5/16”	8	5/8” LH	101	199	0.262	8580
230916	9	-	-	5/8”	101	204	0.283	9850
330916	9	-	-	5/8” LH	101	204	0.283	9850
433816	9.5	3/8”	-	5/8”	101	213	0.302	9850
433820	9.5	3/8”	3/8”	3/4”	120	232	0.408	9900
231016	10	-	-	5/8”	101	218	0.310	9430
331016	10	-	-	5/8” LH	101	218	0.310	9430
231020	10	-	-	3/4”	120	237	0.414	9430
331020	10	-	-	3/4” LH	120	237	0.414	9430
WDS100U34	10	-	10	3/4”	120	245	0.475	12850
WDS100U34L	10	-	10	3/4” LH	120	245	0.475	12850
437160	11.1	7/16”	-	3/4”	120	245	0.475	11250
431220	12.7	1/2”	-	3/4”	120	262	0.494	13100
431222	12.7	1/2”	-	7/8”	140	295	0.621	13100

Threaded Swage Terminal, UNF thread (23- 33- 43- WS- WDS-)

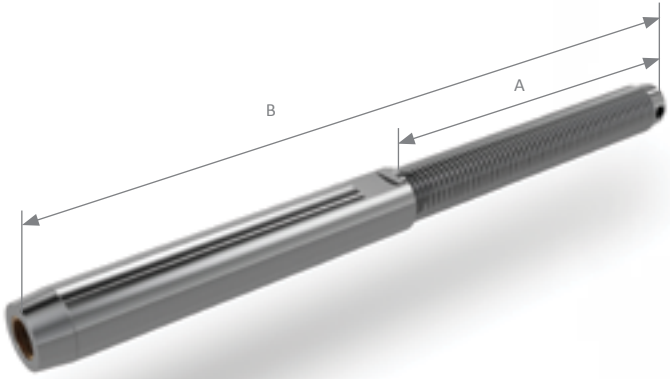

Article No.	Wire Ø			Thread UNF	A mm	B mm	Weight [kg]	Break load [kg]
	mm	inch	Dye					
231220	12	-	-	3/4”	120	254	0.457	10600
331220	12	-	-	3/4” LH	120	254	0.457	10600
WS120U34HD	12	-	-	3/4”	120	254	0.478	12550
WS120U34LHD	12	-	-	3/4” LH	120	254	0.478	12550
WS120U78HD	12	-	-	7/8”	130	274	0.702	12550
WS120U78LHD	12	-	-	7/8” LH	130	274	0.702	12550
WDS12U78	12	-	12	7/8”	143	285	0.860	17500
WDS12U78L	12	-	12	7/8” LH	143	285	0.860	17500
WDS127U1	12.7	-	1/2”	1”	160	302	-	18400
WDS127U1L	12.7	-	1/2”	1” LH	160	302	-	18400
231422	14	9/16”	-	7/8”	140	302	0.859	16550
331422	14	9/16”	-	7/8” LH	140	302	0.859	16550
231625	16	5/8”	-	1”	160	323	1.059	21350
331625	16	5/8”	-	1” LH	160	323	1.059	21350
WDS16U54	16	-	16	1 1/4”	179	364	2.240	37200
WDS16U54L	16	-	16	1 1/4” LH	179	364	2.240	37200
221929	19	3/4”	-	1 1/8”	209	455	2260	29650
WS19U54	19	3/4”	-	1 1/4”	179	389	2.210	33150
WS19U54L	19	3/4”	-	1 1/4” LH	179	389	2.210	33150
WDS19U32	19	-	19;3/4”	1 1/2”	182	406	3.470	49100
WDS19U32L	19	-	19;3/4”	1 1/2” LH	182	406	3.470	49100
WS22U54	22	7/8”	-	1 1/4”	179	420	2.900	37200
WS22U54L	22	7/8”	-	1 1/4” LH	179	420	2.900	37200
WS26U32	26	1”	-	1 1/2”	183	466	4.400	54725
WS26U32L	26	1”	-	1 1/2” LH	183	466	4.400	54725

Photo courtesy of J-Boats

Threaded Eye,
Metric thread (11-)

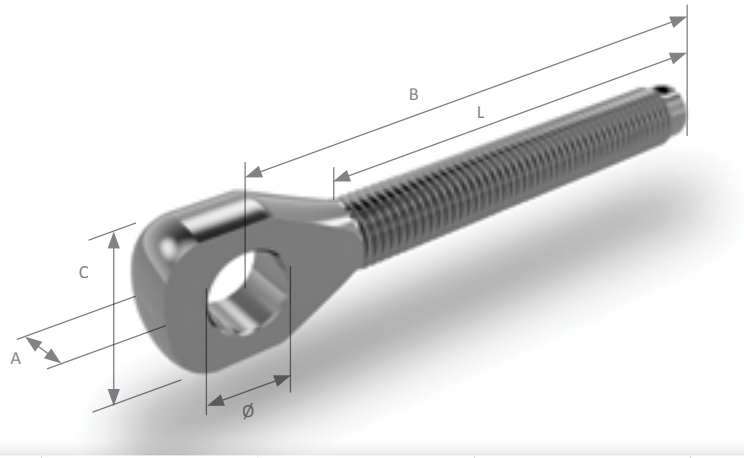

Article No.	Thread metric	Ø mm	A mm	B mm	C mm	L mm	Weight [kg]	Break load [kg]
1100065	M6LH	6.4	5	66	0.015	48	20	1400
1100085	M8LH	8.1	7	78	0.017	55	40	2500
1100105	M10LH	9.6	8,5	91	0.019	63	69	3450
1100125	M12LH	12.8	11	112	0.024	80	128	5650
1100145	M14LH	12.8	11	121	0.025	90	168	6350
1113165	M16 LH	12.8	11	135	28	101	234	7500
1100165	M16LH	16.2	13,5	138	0.030	101	274	8800
1116205	M20 LH	16.2	14	163	34	120	421	15850
1100205	M20LH	19.2	18	165	0.040	120	537	22000

Threaded Fork, Metric thread (11-)

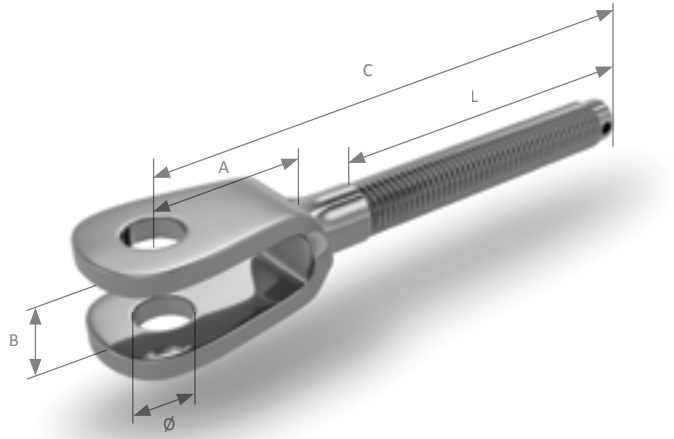

Article No.	Thread metric	Ø mm	A mm	B mm	C mm	L mm	Weight [kg]	Break load [kg]
1100056	M5 LH	5.2	12	7.5	0.065	43	15	880
1100057	M5	5.2	12	7.5	0.065	43	15	880
1100566	M6 LH	5.2	12	7.5	0.071	48	19	1300
1100567	M6	5.2	12	7.5	0.071	48	19	1300
1100066	M6 LH	6.5	13	7.5	0.072	48	20	1300
1100067	M6	6.5	13	7.5	0.072	48	20	1300
1100686	M8 LH	6.5	13	7.5	0.082	55	33	2200
1100687	M8	6.5	13	7.5	0.082	55	33	2200
1100086	M8 LH	8.3	16	8.0	0.086	55	46	2350
1100087	M8	8.3	16	8.0	0.086	55	46	2350
1108106	M10 LH	8.3	16	8.0	0.094	63	60	3550
1108107	M10	8.3	16	8.0	0.094	63	60	3550
1100106	M10 LH	9.8	19	10.5	0.096	63	73	3700
1100107	M10	9.8	19	10.5	0.096	63	73	3700
1113126	M12 LH	10.5	23	13.5	122	80	122	5250
1113127	M12	10.5	23	13.5	122	80	122	5250
1100126	M12 LH	13.1	25	14.5	0.125	86	145	5250
1100127	M12	13.1	25	14.5	0.125	86	145	5250
1100146	M14 LH	13.1	25	14.5	0.135	90	181	6900
1100147	M14	13.1	25	14.5	0.135	90	181	6900
1158146	M14 LH	16.4	37	17.0	148	90	252	7100
1158147	M14	16.4	37	17.0	148	90	252	7100
1113166	M16 LH	13.1	33	17.0	156	101	282	8950

Threaded Fork,
Metric thread (11-)

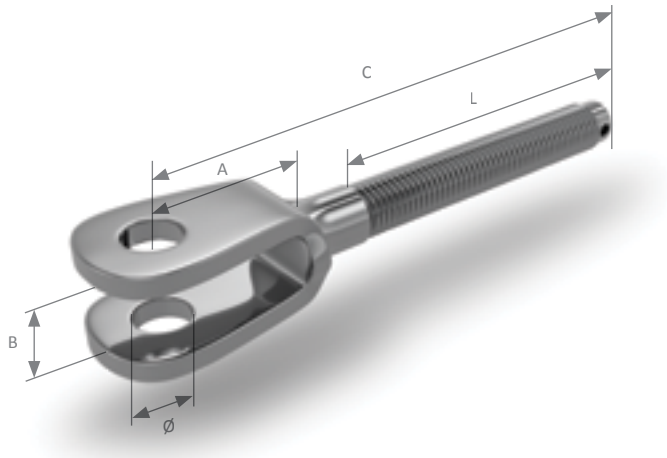

Article No.	Thread metric	Ø mm	A mm	B mm	C mm	L mm	Weight [kg]	Break load [kg]
1113167	M16	13.1	33	17.0	156	101	282	8950
1100166	M16 LH	16.4	37	17.0	0.158	101	307	9300
1100167	M16	16.4	37	17.0	0.158	101	307	9300
1116206	M20 LH	16.4	40	20.0	182	120	520	13870
1116207	M20	16.4	40	20.0	182	120	520	13870
1100206	M20 LH	19.2	45	20.0	0.187	120	588	13870
1100207	M20	19.2	45	20.0	0.187	120	588	13870
1100306	M30 LH	32.8	70	35.0	0.350	232	2574	30000
1100307	M30	32.8	70	35.0	0.350	232	2574	30000

Threaded Toggle Terminal, Metric thread (14-)

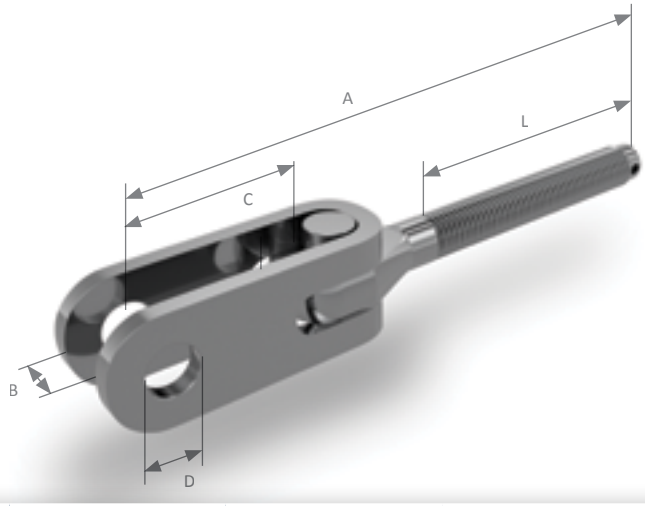

Article No.	Thread metric	Ø mm	A mm	B mm	C mm	L mm	Weight [kg]	Break load [kg]
1400066	M6LH	6.3	14.0	8.5	92	48	0.032	1200
1400088	M8LH	8.0	26.0	10.5	111	55	0.080	2350
1400108	M10LH	9.5	29.5	12.0	130	63	0.157	3700
1400128	M12LH	12.7	35.5	15.5	160	80	0.272	5250
1400148	M14LH	12.7	34.0	15.5	170	90	0.310	6500
1413168	M16LH	12.7	33.0	15.5	182	101	0.351	7500
1400168	M16LH	16.0	34.5	18.0	189	101	0.542	8800
1416208	M20LH	16.0	32.0	18.0	212	120	0.605	13400
1400208	M20LH	19.0	36.5	22.0	236	120	0.942	13870

Closed Stainless Steel Body, Metric thread (11-)

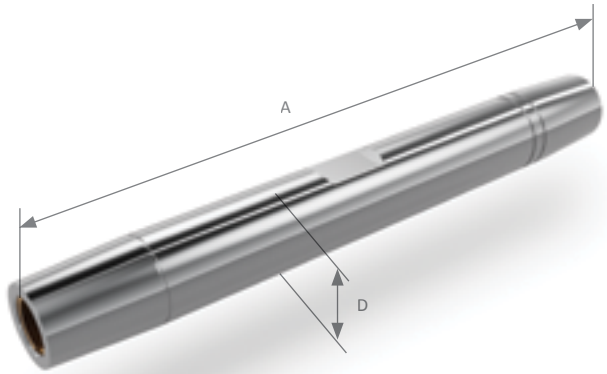

Article No.	Thread metric	D mm	L mm	SW mm	Weight [kg]	Break load [kg]
110005-1	M5	8.0	85	6	00.2	1350
110006-1	M6	9	96	8	0.03	1850
110008-1	M8	12	106	10	0.05	3000
110010-1	M10	15	124	13	0.11	4750
110012-1	M12	18	155	16	0.19	7150
110014-1	M14	20	170	18	0.24	7600
110016-1	M16	24	190	19	0.41	9550
110020-1	M20	28	225	24	0.55	12350

Closed Stainless Steel Body, UNF thread (12-)

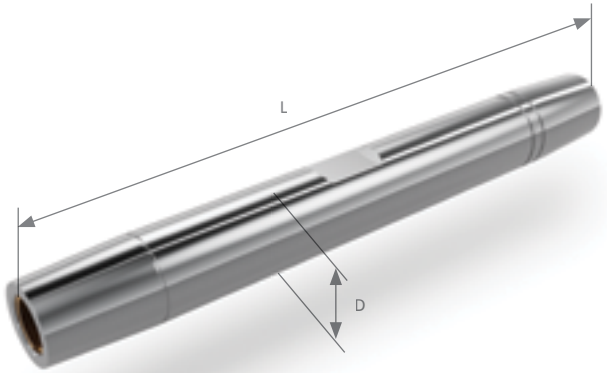

Article No.	Thread UNF	D mm	L mm	SW mm	Weight [kg]	Break load [kg]
120006-1	1/4”	9	96	8	0.028	1600
120008-1	5/16”	12	106	10	0.058	3000
120010-1	3/8”	14	124	11	0.090	3500
120011-1	7/16”	16	140	14	0.128	5000
120012-1	1/2”	19	155	16	0.207	7350
120016-1	5/8”	24	190	19	0.407	9600
120020-1	3/4”	28	225	24	0.615	12800

Open Chromed Bronze Body, UNF thread (18-)

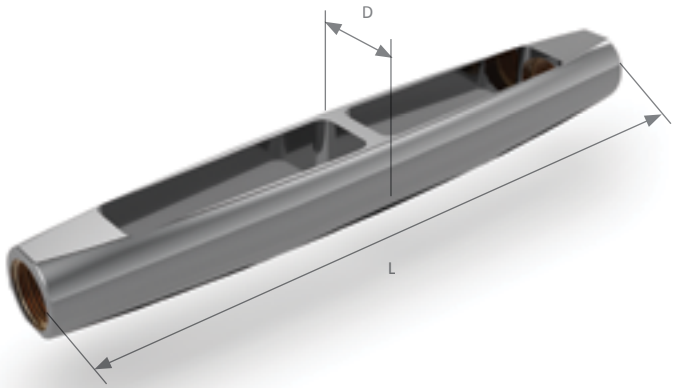

Article No.	Thread UNF	D mm	L mm	SW mm	Weight [kg]	Break load [kg]
180006-1	1/4”	14.0	99	9	0.035	2300
180008-1	5/16”	17.0	114	11	0.060	3400
180010-1	3/8”	21.0	130	13.4	0.100	4200
180011-1	7/16”	24.0	147	15.1	0.145	5600
180012-1	1/2”	27.0	165	17.4	0.200	7500
180016-1	5/8”	32.0	207	20.7	0.340	10200
180020-1	3/4”	38.0	246	25.4	0.625	13250
180022-1	7/8”	45.3	290	30	1.045	19300

Closed Stainless Steel Bronze inserted Body, UNF thread (19-)

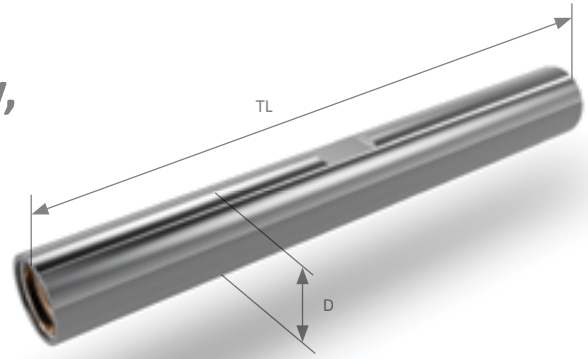

Article No.	Thread UNF	TL mm	SW mm	D mm	Weight [kg]	Break load [kg]	Lock nut LH Article No.	Lock nut RH
190006	1/4”	99	10	12.7	0.52	2550	1900UL8	1900U8
190008	5/16”	114	11	13.8	0.89	3200	1900UL10	1900U10
190010	3/8”	130	13	15.6	0.12	3700	1900UL12	1900U12
190011	7/16”	147	16	17.5	0.17	5000	1900UL14	1900U14
190012	1/2”	165	18	19.9	0.23	7150	1900UL16	1900U16
190016	5/8”	207	21	24.8	0.47	10000	1900UL20	1900U20
190020	3/4”	246	27	32.7	1.02	14700	1900UL24	1900U24
190022	7/8”	290	32	36.0	1.30	20550	1900UL28	1900U28
190025	1”	301	36	43.0	2.07	25900	1900UL32	1900U32
190025-2	1”	320	36	43.0	2.22	25900	1900UL32	1900U32
190028	1 1/8”	360	41	46.0	2.63	30850	1900UL36	1900U36
190032	1 1/4”	327	46	51.8	3.13	39050	1900UL40	1900U40
190032-2	1 1/4”	410	46	51.8	3.85	39050	1900UL40	1900U40
190035	1 3/8”	350	50	56.5	4.13	44950	1900UL44	1900U44
190035-2	1 3/8”	460	50	56.5	5.40	44950	1900UL44	1900U44
190038	1 1/2”	350	50	59.6	4.54	53450	1900UL48	1900U48
190038-2	1 1/2”	490	50	59.2	6.35	53450	1900UL48	1900U48

Threaded Eye, UNF thread (13-)

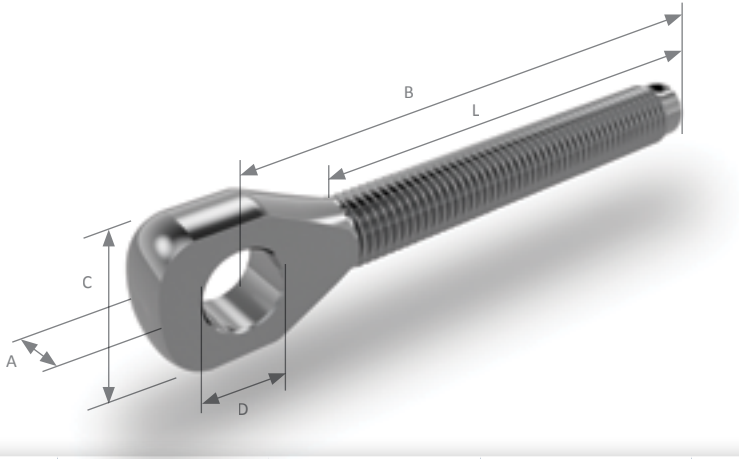

Article No.	Thread UNF	D mm	A mm	B mm	C mm	L mm	Weight [kg]	Break load [kg]
1300065	1/4”LH	6.4	4	63	15	47	0.02	1400
1300085	5/16”LH	8.1	7	78	15.7	55	0.04	2300
1308105	3/8”LH	8.1	7	85	17	68	0.05	3550
1300105	3/8”LH	9.6	8.5	91	19	63	0.06	3550
1310115	7/16”LH	9.6	9	100	22	71	0.09	4650
1300115	7/16”LH	11.1	10	100	22	71	0.09	4650
1300125	1/2”LH	12.8	11	110	24	80	0.13	5900
1313165	5/8”LH	12.8	11	132	28	101	0.23	7300
1314165	5/8”LH	14.4	13.5	138	30	101	0.24	9000
1300165	5/8”LH	16.2	13.5	138	30	101	0.27	9000
1316205	3/4”LH	16.2	14	162	34	120	0.40	12500
1300205	3/4”LH	19.2	17.2	165	40	120	0.45	14150
1320225	3/4”LH	22.3	19.4	168	42	120	0.53	13050
1300225	7/8”LH	22.3	19.7	198	45	144	0.75	18000
1300225-1	7/8”LH	22.3	19.5	205.5	45.5	161	0.8	18000
1300255	1”LH	25.6	21.5	208	48	150	1.00	23000
1300285-2	1_1/8”LH	28.8	25	262	55.2	200	1.69	30000
1300325	1 1/4”LH	32.0	29	250	62	180	2.00	37200
1300355	1 1/2”LH	35.2	32	272	69	190	3.05	50000

Threaded Fork, UNF thread (13-)

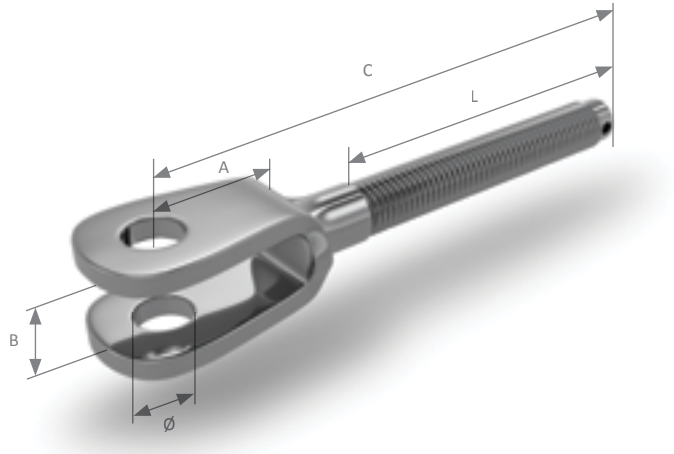

Article No.	Thread UNF	D mm	A mm	B mm	C mm	L mm	Weight [kg]	Break load [kg]
1300067	UNF 1/4”	6.5	13.0	7.0	72	48	0.023	1550
1300066	UNF 1/4”LH	6.5	13.0	7.0	72	48	0.023	1550
1300087	UNF 5/16”	8.3	17.0	8.0	86	55	0.044	2450
1300086	UNF 5/16” LH	8.3	17.0	8.0	86	55	0.044	2450
1300107	UNF 3/8”	9.8	19.0	10.0	96	63	0.071	3540
1300106	UNF 3/8” LH	9.8	19.0	10.0	96	63	0.071	3540
1300117	UNF 7/16”	11.4	24.0	12.0	114	71	0.118	4750
1300116	UNF 7/16” LH	11.4	24.0	12.0	114	71	0.118	4750
1300127	UNF 1/2”	13.1	25.0	14.5	125	80	0.157	6450
1300126	UNF 1/2” LH	13.1	25.0	14.5	125	80	0.157	6450
1313167	UNF 5/8”	13.1	32.5	17.0	155	101	0.280	9300
1313166	UNF 5/8” LH	13.1	32.5	17.0	155	101	0.280	9300
1300167	UNF 5/8”	16.4	35.0	17.0	158	101	0.309	9300
1300166	UNF 5/8” LH	16.4	35.0	17.0	158	101	0.309	9300
1316207	UNF 3/4”	16.4	39.5	20.0	181	120	0.508	14050
1316206	UNF 3/4” LH	16.4	39.5	20.0	181	120	0.508	14050
1300207	UNF 3/4”	19.2	45.0	20.0	186	120	0.574	14350
1300206	UNF 3/4” LH	19.2	45.0	20.0	186	120	0.574	14350
1300227	UNF 7/8”	22.0	54.0	24.0	237	155	0.985	18300
1300226	UNF 7/8” LH	22.0	54.0	24.0	237	155	0.985	18300
1300257	UNF 1”	25.0	66.0	26.0	277	180	1.600	23000
1300256	UNF 1” LH	25.0	66.0	26.0	277	180	1.600	23000

Threaded Toggle Terminal, UNF thread (16-)

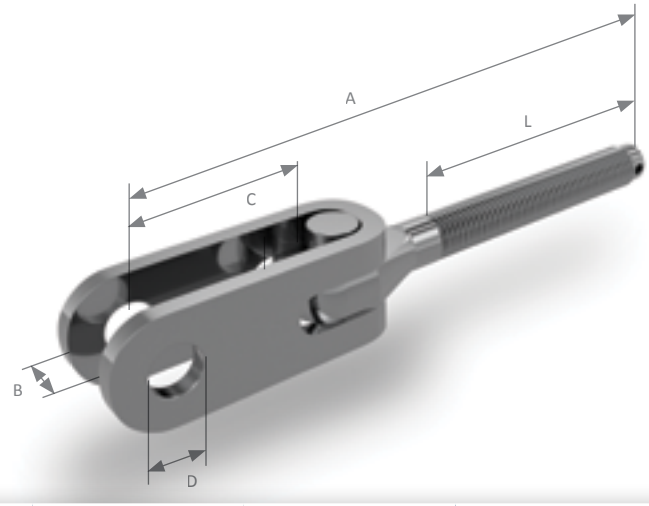

Article No.	Thread UNF	D mm	A mm	B mm	C mm	L mm	Weight [kg]	Break load [kg]
1600066	1/4”LH	6.3	14.0	8.5	77	47	0.033	1200
1600088	5/16”LH	8.0	26.0	10.5	111	55	0.082	2450
1600108s	3/8”LH	9.5	32.8	11.0	135	62.5	0.185	3540
1600118	7/16”LH	11.0	31.5	14.0	142	71	0.201	4750
1600128s	1/2”LH	12.7	38.9	14.0	162	80	0,356	5900
1613168	5/8”LH	12.7	33.0	15.5	182	101	0.370	7500
1600168s	5/8”LH	15.9	39.2	17.5	194	101	0,675	9000
1616208	3/4”LH	16.0	32.5	18.0	212	120	0.713	13400
1600208s	3/4”LH	19.1	53.5	18.0	221	120	1.05	14350
1622208	3/4”LH	22.0	65.0	24.0	261	120	1.26	14350
1600228s	7/8”LH	22.2	65.6	24.0	288	144	1.78	18300
1600258	1”LH	25.4	59.0	27.5	296	150	2.20	23000
1600288	1 1/4”LH	28.6	70.5	31.5	342	180	4.12	35250
1600288-2	1 1/8”LH	28.6	72.0	31.5	362	200	3.49	35250
1600328	1 1/4”LH	31.8	70.5	34.5	353	180	4.14	35250
1600358	1 1/2”LH	34.9	85.5	42.0	395	190	8.67	49000

Threaded Ball Terminal, UNF thread (27-)

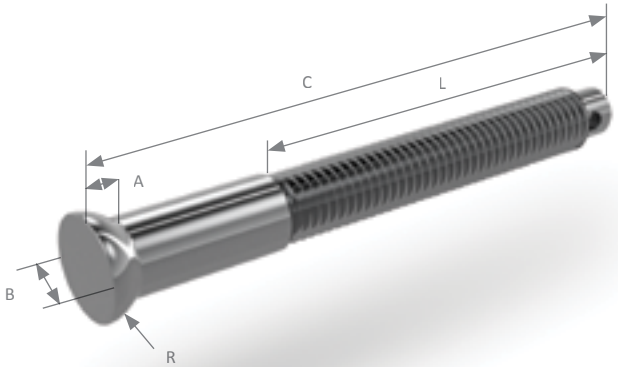

Article No.	Thread UNF	A mm	B mm	C mm	R mm	L mm	Weight [kg]	Break load [kg]
270306	UNF 1/4”LH	5.6	14.0	68	7.8	48	0.02	1550
270408	UNF 5/16”LH	6.0	17.8	93	9.8	57	0.04	2450
WB8-U10	UNF 5/16”LH	6.7	15.3	93	7.8	63	0.04	2300
270510	UNF 3/8”LH	6.0	19.0	98	7.0	63	0.06	3650
273805	UNF 3/8”LH	8.0	18.0	104	8.0	75	0.06	3650
273885	UNF 3/8”LH	8.0	23.5	104	8.0	75	0.07	3650
WB9-U12	UNF 3/8”LH	7.5	17.5	100	8.8	63	0.06	3650
WB11-U14	UNF 7/16”LH	8.6	21.6	120	11.0	81	0.10	4750
WB13-U14	UNF 7/16”LH	11.0	24.2	120	12.3	81	0.11	4750
271106	UNF 7/16”LH	12.0	26.0	124	12.0	81	0.12	4750
WB11-U16	UNF 1/2”LH	8.7	21.5	120	11.0	81	0.13	6400
271206	UNF 1/2”LH	12.0	26.0	124	12.0	85	0.13	6400
271207	UNF 1/2”LH	9.5	24.0	128	12.5	85	0.13	6400
271207-1	UNF 1/2”LH	10.0	24.2	128	12.3	85	0.13	6400
28271206	UNF 1/2”LH	12.5	28.0	125	14.0	85	0.14	6400
270816	UNF 5/8”LH	9.0	27.5	142	10.5	103	0.22	9750

Threaded Ball Terminal, UNF thread (27-)

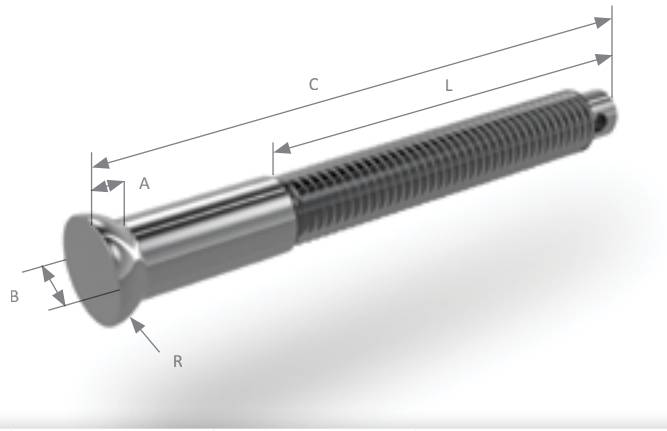

Article No.	Thread UNF	A mm	B mm	C mm	R mm	L mm	Weight [kg]	Break load [kg]
WB15-U20-1	UNF 5/8”LH	12.4	29.1	175	14.8	114	0.29	9750
WB16-U20-1	UNF 5/8”LH	13.0	29.9	170	15.8	116	0.30	9750
275808	UNF 5/8”LH	14.0	27.0	172	13.5	110	0.28	9750
273410	UNF 3/4”LH	14.0	27.5	179	14.0	120	0.39	13000
273415	UNF 3/4”LH	12.7	29.5	190	14.8	133	0.44	13000
273416	UNF 3/4”LH	14.0	31.5	180	15.8	120	0.42	13000
273416-1	UNF 3/4”LH	14.0	31.5	195	15.8	140	0.45	13000
273418	UNF 3/4”LH	15.8	35.2	191	17.8	121	0.48	13000
65277812	UNF 7/8”LH	14.3	34.0	170	17.0	110	0.51	18500
65277812-1	UNF 7/8”LH	15.0	33.5	221	16.9	160	0.70	18500
WB20-U32-1	UNF 1”LH	17.8	39.6	244	19.8	176	1.02	22000
272522	UNF 1”LH	18.0	43.2	225	21.8	150	0.91	22000
272522-1	UNF 1”LH	18.9	43.2	247	21.8	170	1.06	22000
272525	UNF 1”LH	22.0	49.2	225	24.8	150	1.02	22000
273225	UNF 1 1/4”LH	19.8	49.2	256	24.8	175	1.70	35100

Threaded T-terminal
UNF thread (2612-)

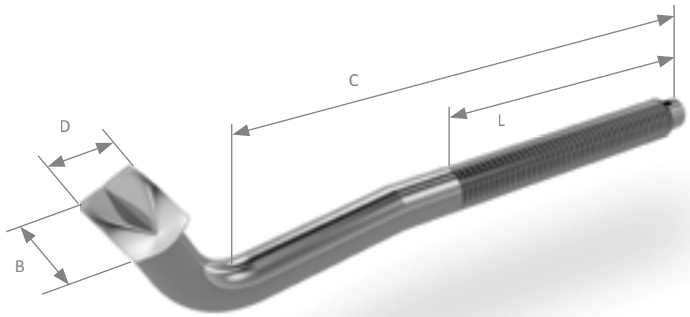

Article No.	Thread UNF	A mm	B mm	C mm	D mm	L mm	Weight [kg]	Break load [kg]
261206	UNF 1/4"LH	6.35	15	17.0	89	48	0.025	1450
261208	UNF 5/16"LH	8.00	16	17.5	105	55	0.045	2250
261210	UNF 3/8"LH	9.00	19	20.5	120	63	0.075	3400
261211	UNF 7/16"LH	12.7	25	31.5	148	71	0.170	4350
261312	UNF 1/2"LH	12.7	26	31.5	155	80	0.185	6150

DRAGONFLY 35 ULTRA

Backing Plate for T-terminals 70

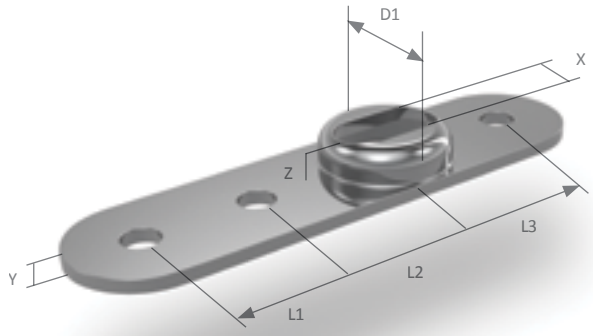

Article No.	Size mm	W mm	X mm	Y mm	Z mm	D1 mm	D2 mm	L1 mm	L2 mm
700034	3.0 / 4.0	-	9.0	3.0	5.0	20.5	5.2	17.0	21.5
700005	5.0	-	10.0	3.0	5.0	20.5	5.2	17.0	21.5
700006	6.0	-	13.5	3.0	6.5	30.6	6.8	22.0	28.0
700007	7.0	23.0	15.0	4.0	10.5	39.2	6.8	20.0	37.0
700008	8.0	23.0	17.0	4.0	10.5	39.2	6.8	20.0	37.0

Toggle
(81-)

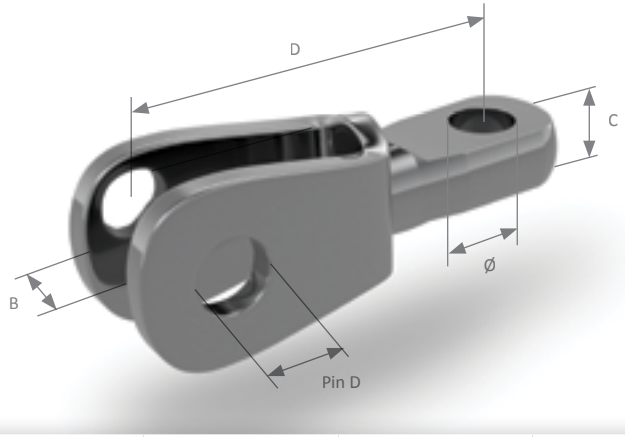

Article No.	Wire Ø mm	Pin D mm	Ø mm	A mm	B mm	C mm	D mm	Weight [kg]	Break Load [kg]
810005	2.5	5.0	5.1	7.0	11.5	5.0	23.0	0.019	1400
810006	3.0	6.3	6.4	7.0	13.5	6.0	30.0	0.031	2200
810008	4.0	8.0	8.1	8.0	17.0	7.5	36.5	0.061	3550
810010	5.0	9.5	9.6	10.0	19.5	8.5	43.0	0.092	4350
810011	6.0	11.0	11.1	12.0	24.0	10.0	47.5	0.137	6200
810012	7.0	12.7	12.8	14.5	25.0	11.0	50.0	0.180	6900
810016	8.0	16.0	16.2	17.0	35.0	12.0	70.0	0.317	9300
815820	8.0	16.0	16.2	20.0	40.0	15.0	80.0	0.514	9300
810020	12.0	19.0	19.2	20.0	45.0	18.0	94.0	0.653	14500
810022	12.0	22.2	22.2	25.0	55.0	20.0	120.0	1.040	20250

Stemball Cups
(72- WBC-)

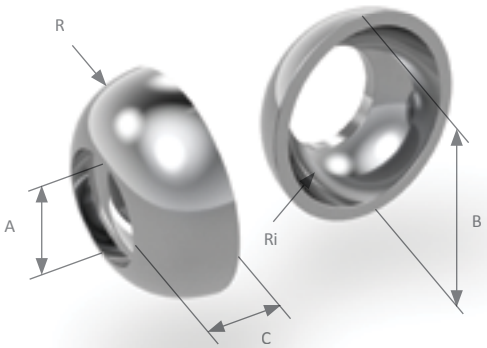

Article No.	A mm	B mm	C mm	R mm	Ri mm	Weight [kg]
WBC8009	8.0	17.4	7.6	8.7	6.7	0.005
720009	9.0	15.5	4.0	7.0	5.5	0.001
WBC09011	9.0	21.1	8.6	10.6	7.5	0.009
720011	11.0	26.0	9.5	10.0	8.0	0.010
WBC12511	12.5	21.6	8.8	11.0	9.0	0.007
720013	13.0	26.0	9.0	10.0	8.0	0.009
WBC14513	14.5	25.8	10.7	13.0	11.0	0.011
WBC15016	15.0	31.5	13.9	16.0	11.0	0.037
720016	16.0	26.0	8.5	10.0	8.0	0.009
WBC16014	16.0	27.6	11.2	14.0	11.0	0.011
RSC141918	18.0	36.7	12.9	18.7	14.3	0.038
WBC19018	19.1	35.6	15.1	17.8	14.0	0.038
720020	20.0	34.0	9.0	15.0	13.0	0.015
720022	22.0	34.0	9.0	15.0	13.0	0.013

Stemball Eye (2427- WEB-)

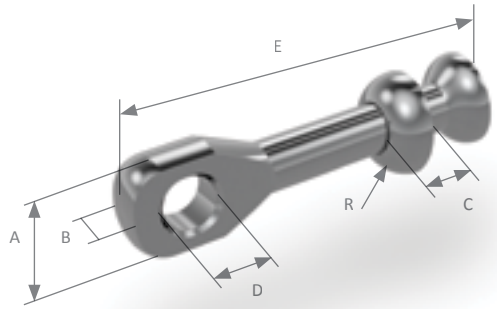

Article No.	Wire Ø mm	Ø mm	A mm	B mm	C mm	D mm	E mm	R mm	Weight [kg]	Break load [kg]
242705	5.0	9.6	20	9	8.5	26	108	10	0.083	3600
242755	5.0	11.1	22	9	9	26	108	10	0.085	3600
WEB12713	6-Jul	12.8	24	10	11	26	113	13	0.155	4950
242708	8-Dye 8	16.1	30	13	12.3	34	140	15	0.312	7400
242710	10-Dec	19.2	36	16	9.0	34	152	15	0.435	13600

T-Bar Eye (2426-)

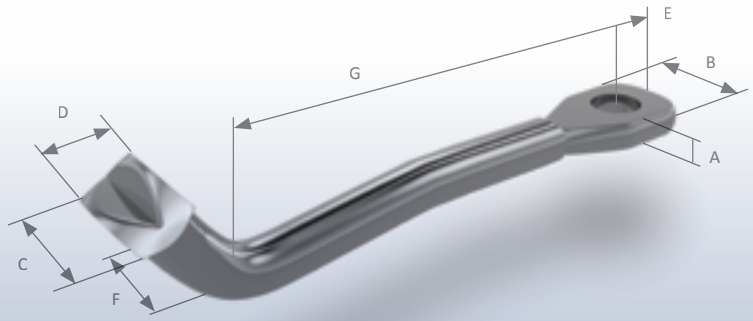

Article No.	A mm	B mm	C mm	D mm	E mm	F mm	[kg] mm	Ø mm	Weight [kg]
24260018	4.0	14.5	17.0	6.4	8.5	6.5	63.0	6.5	0.025
24260532	6.0	16.0	17.5	8.0	9.0	8.0	71.5	7.9	0.042
24260316	8.0	19.2	20.5	9.0	11.0	10.0	83.5	10.2	0.067

Technical Data
Swaging data for Wire

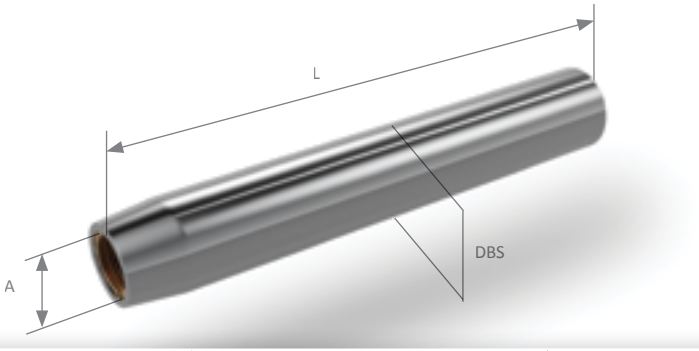

Nominal wire size			Equivalent toolsize	D before swaging mm	D after swaging mm	A mm	L mm
mm	inch	Dye					
2	-	-	W2	5.41 - 5.54	4.70 - 4.82	2.32 - 2.44	32.0
2.5	3/32"	-	W3	6.22 - 6.35	5.44 - 5.56	2.70 - 2.83	32.0
3	1/8"	3	W3	6.22 - 6.35	5.44 - 5.56	3.45 - 3.65	38.5
4	5/32"	-	W4	7.42 - 7.50	6.22 - 6.35	4.30 - 4.50	45.0
-	-	4; 5/32"	W5	9.00 - 9.11	7.82 - 7.95	4.30 - 4.50	45.0
5	3/16"	-	W5	9.00 - 9.11	7.82 - 7.95	5.25 - 5.45	51.5
-	-	5; 3/16"	W7/32"	10.72 - 10.85	9.35 - 9.50	5.25 - 5.45	58.0
-	7/32"	-	W7/32"	10.72 - 10.85	9.35 - 9.50	5.95 - 6.10	58.0
6	-	6	W6	12.42 - 12.55	10.95 - 11.13	6.35 - 6.50	61.0
-	1/4"	1/4"	W6	12.42 - 12.55	10.95 - 11.13	6.65 - 6.85	64.3
7	9/32"	7	W7	14.18 - 14.30	12.50 - 12.70	7.45 - 7.65	70.5
8	5/16"	8	W8	16.01 - 16.13	14.07 - 14.30	8.27 - 8.50	77.0
-	3/8"	3/8"	W10	17.73 - 17.86	15.70 - 15.90	9.87 - 10.10	90.0
10	-	-	W10	17.73 - 17.86	15.70 - 15.90	10.37 - 10.60	95.0
-	-	10	W11	19.63 - 19.83	17.27 - 17.47	10.37 - 10.60	110.0
11	7/16"	-	W11	19.63 - 19.83	17.27 - 17.47	11.87 - 12.10	102.5
-	-	11; 7/16"	W12	21.31 - 21.44	18.82 - 19.05	11.87 - 12.10	120.0
12	-	-	W12E	19.95 - 20.00	17.27 - 17.47	12.47 - 12.70	112.0
12HD	-	-	W12	21.31 - 21.44	18.82 - 19.05	12.47 - 12.70	112.0
-	-	12	W14	24.88 - 25.00	22.00 - 22.23	12.47 - 12.70	130.0
-	1/2"	-	W12	21.31 - 21.44	18.82 - 19.05	13.47 - 13.70	120.0
-	-	1/2"	W14	24.88 - 25.00	22.00 - 22.23	13.47 - 13.70	137.0
14	9/16"	-	W14	24.88 - 25.00	22.00 - 22.23	14.97 - 15.20	128.0
-	-	14	W16	28.17 h9	-	15.0 Tol.+2.0-0.03	150.0
16	5/8"	-	W16	28.05 - 28.17	25.15 - 25.40	16.67 - 16.90	141.0
-	-	16	W19	34.40 - 34.50	31.44 - 31.75	16.67 - 16.90	165.0
19	3/4"	-	W19	34.40 - 34.50	31.44 - 31.75	19.84 - 20.15	165.5
-	-	19	W22	40.21 - 40.46	-	19.9 Tol.+2.5-0.06	195.0
22	7/8"	-	W22	40.21 - 40.46	36.20 - 36.50	23.30 - 23.70	182.0
25-26	1"	-	W25	45.77 - 46.02	40.95 - 41.25	26.57 - 26.90	210.0

CARBON
CARB

Global Presence

Based in Haderslev Denmark, BSI has designed, engineered and manufactured leading rigging, deck hardware and hatch solutions for the yachting industry, since the beginning in 1978. Additionally, BSI's expertise in hatches has led to the development of products for the wind energy sector.

In conjunction with our customers, BSI provides results through the use of best practices, solution oriented experts, and our commitment to integrity. BSI's collaboration with our customers begins with analyzing their needs, continues through in-house design, manufacture, installation and service for the entire lifespan of our products. The BSI Group's customer focused management philosophy makes product innovation a hallmark that is reflected in our design and engineering accomplishments.

BSI A/S
Fjordagervej 34-36
DK-6100 Haderslev
Denmark

Phone: +45 7322 2222
Fax: +45 7322 2211
Email: info@bsidk.com

BSI Rhode Island
300 Highpoint Avenue
Portsmouth, Rhode Island 02871
United States of America

Phone: + 1 401 682 2488
Fax: + 1 401 682 2487
Email: info@bsidk.com

www.bsidk.com

All technical specifications, design details, availability are provided “as is” and subject to change without prior notice.
12.1.05p2012.09.10